CTN.FI

RECOVERY TECHNOLOGIES

e°CABIN™

Whole Body Cryotherapy Cabin

USER MANUAL



CTN.FI

10.2024

TABLE OF CONTENTS

1. INTRODUCTION 3
2. WARRANTY INFORMATION 3
3. UNBOXING INSTRUCTIONS 4
4. SAFETY PRECAUTIONS 5
5. TECHNICAL INFORMATION 6
6. EXTERNAL COMPONENTS 7
7. ROOM REQUIREMENTS AND STORAGE 8
8. ASSEMBLY INSTRUCTIONS 9
9. INSTRUCTIONS FOR USE 10
   - 9.1 TURNING ON THE e°CABIN 10
   - 9.2 PRECOOLING CYCLE 11
   - 9.3 TREATMENT SESSION & SETTINGS 12
   - 9.4 DRYING CYCLE 14
10. SETTINGS IN THE USER INTERFACE 15
   - 10.1 UNITS OF MEASUREMENT, LANGUAGES & UPDATES 15
   - 10.2 MANAGE USERS 15
   - 10.3 AUDIO & VIDEO ADJUSTMENTS 15
   - 10.4 CALIBRATE LIFT 16
   - 10.5 IO VIEW 16
11. ADDITIONAL SETTINGS & FEATURES 16
   - 11.1 EXITING AND OPENING THE e°CABIN SOFTWARE 16
   - 11.2 SYSTEM CLOCK 17
   - 11.3 CONNECTING WIFI 17
   - 11.4 ONBOARD KEYBOARD 17
   - 11.5 USING YOUR MEDIA 18
   - 11.6 TEAMVIEWER 19
12. MAINTENANCE 19
13. POSSIBLE CONTRAINDICATIONS 20
14. HOW TO WIRE 220V IN A US 110V GRID 20

1. INTRODUCTION

Thank you for choosing Cryotech Nordic! We sincerely appreciate your business and hope that you are satisfied with your purchase. Our team will gladly assist you in case you need support using or maintaining the e°CABIN.

The e°CABIN™ by Cryotech Nordic (CTN) is a revolutionary electrically powered recovery cabin built for both professional and home use. It has been designed and developed in Finland by experienced cryo engineers.

Please read this manual carefully before operating the e°CABIN. The manual consists of easy to follow step-by-step guides to help you safely set up and use the e°CABIN. This User Manual is an integral part of the product, please keep it within easy reach for reference purposes.

This user manual contains important safety information and instructions for the assembly, operation and maintenance of the e°CABIN, which must be taken into account. Non-compliance with the safety information, installation and operating instructions or specifications and ambient conditions of the space where the device is used, can lead to danger for people, the environment, endanger the e°CABIN and its functions, and lead to the loss of claims for damages of any kind. Please see the Warranty Information paragraph for more information.

If the e°CABIN is subject to demolition, the product and its components must be disposed of in accordance with the environmental regulations.

Scan this QR code to access tutorial videos and download the latest e°CABIN user manual, or CLICK HERE.

2. WARRANTY INFORMATION

Void of factory warranty. A 36 months limited manufacturers factory warranty is applied to each sold CTN device, and is valid from the date of delivery. The term is 36 months for materials and manufacturing defects, and 12 months for computers and electronic components. Each device has its own specific requirements for the ambient conditions of the space it will be installed in or used. These include but are not limited to square meters, cubic meters, maximum ambient temperature and humidity, power feed etc. Non-compliance with the safety information, installation and operating instructions or specifications and ambient conditions of the space the device is used, can lead to danger for people, the environment, endanger the device and its functions, and lead to the loss of claims for damages of any kind.

SUPPORT
service@ctn.fi
https://ctn.fi

3. UNBOXING INSTRUCTIONS

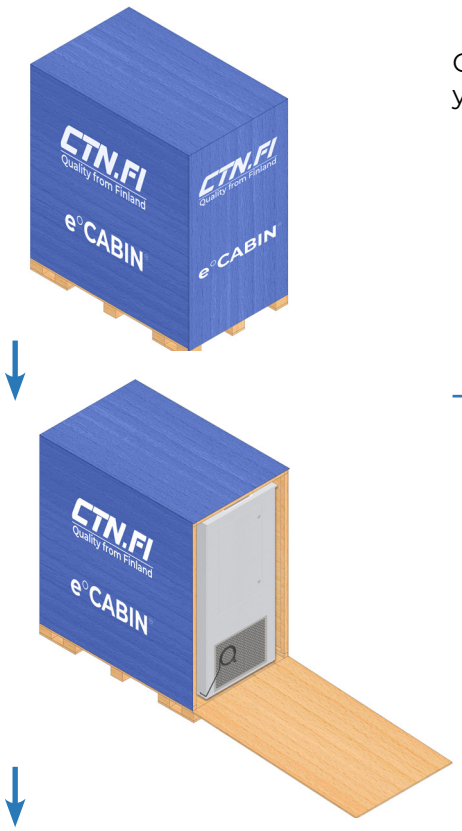

Our support team can help you plan the installation of your device. Please scan this QR-code to check out a short video for more information, or CLICK HERE:

1. Make sure there is enough room for opening up the crate. The panels need to be unscrewed for removal. Remove the latched wall first and use it as a roll-down ramp as demonstrated. Note the monitor box packed with the e°CABIN and take it out.

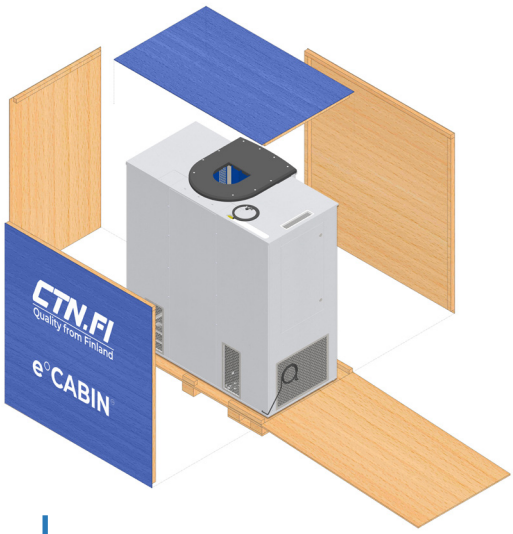

2. Lift off the roof and then all of the other panels. Unscrew the wooden blocks that are blocking the wheels of the e°CABIN.

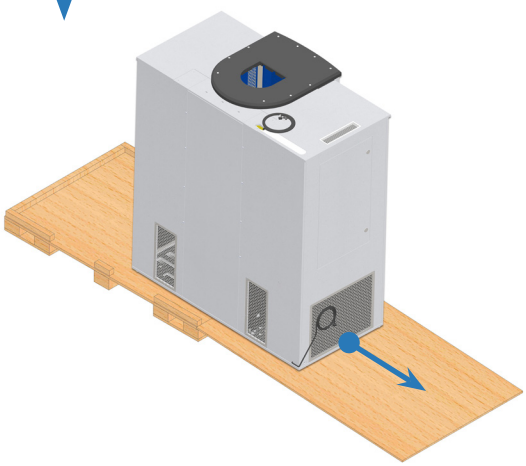

3. Carefully roll the e°CABIN down the ramp. Push the unit from the corners. Avoid putting pressure on the center of the hinged electrical cabinet door on the left side of the e°CABIN while pushing the device.

4. SAFETY PRECAUTIONS

WARNING: Precautions that must be observed to prevent injuries.	**CAUTION:** Precautions that must be observed to prevent damage to the unit.

WARNING
Remove jewelry and/or other metal items from your body below the chin.
Wear warm and dry socks or shoes, gloves, underwear and a scarf/buff to protect sensitive body parts.
Do not use body creams, oils or other skin products before the session. Make sure to dry your body before the session if you are sweating.
Cryotherapy can cause various side effects (skin redness, irritation, numbness, frostnip etc., generally temporary). Use at your own risk.
Cryotherapy should be avoided if the patient has a high blood pressure, a heart disease, skin infections, cold allergies, metal implants, pacemakers or history of other illnesses, is pregnant or underage. Cryotherapy is known to decrease heart rate and increase blood pressure. Always consult a doctor and/or physician before cryotherapy and use the e°CABIN at your own risk. See the Possible Contraindications paragraph for additional information.
Do not climb on top of the device.
Do not touch electrical components with wet hands.

CAUTION
Room requirements: The temperature in the operating area must not exceed 24°C. Air conditioning is highly recommended as the device produces heat. The optimal room size is over 15m². If humidity in the operating area can exceed 40% at 24°C, a dehumidifier must be used in the room to avoid damage to the device. Please read the Room Requirements paragraph for more information.
Only use accessories and replacement parts authorized/ provided by CTN. Contact the Support team for help and ask a qualified technician to fit the parts.
All electrical work should be performed by a qualified technician according to local regulations and instructions given in this manual.
The device must be powered by a dedicated power supply and the correct voltage and circuit breakers must be used.
The device should be positioned on a hard flat surface that is capable of supporting its weight.
Only qualified personnel with proper refrigerant removal/ servicing equipment should handle the maintenance and disposal of the refrigerant components.
Periodical maintenance should be performed according to the Maintenance paragraph.
Do not store the device in uncontrolled conditions, especially outdoors, even in the delivery crate.
When the e°CABIN is being disassembled into three modules, the singular modules can tip over. The disassembly, moving the singular modules and reassemblying the modules must be done with at least two people at all times.

5. TECHNICAL INFORMATION

Product Name:	e°CABIN™
Main Display:	24" touchscreen
Media Screens:	2 x 27"; 1 x 34" curved monitors
Power Consumption:	2-3,2 kW/h, 250 W/h in Standby mode
Main Voltage:	220-240 V, ≥16A fuse
Mains Frequency:	50 / 60 Hz
Device Weight:	~800 kg | 1764 lbs packed, ~700 kg | 1544 lbs unpacked
Dimensions:	1780*900*2000 (mm, L*W*H, unpacked)
User Weight Limit:	150 kg | 330 lbs
Lift:	Linak electric mechanical lift
Session Duration:	2-5 minutes, adjustable
Session Settings:	Mild, Default, Intense
Fan Patterns:	Bottom first, Top first, All on.





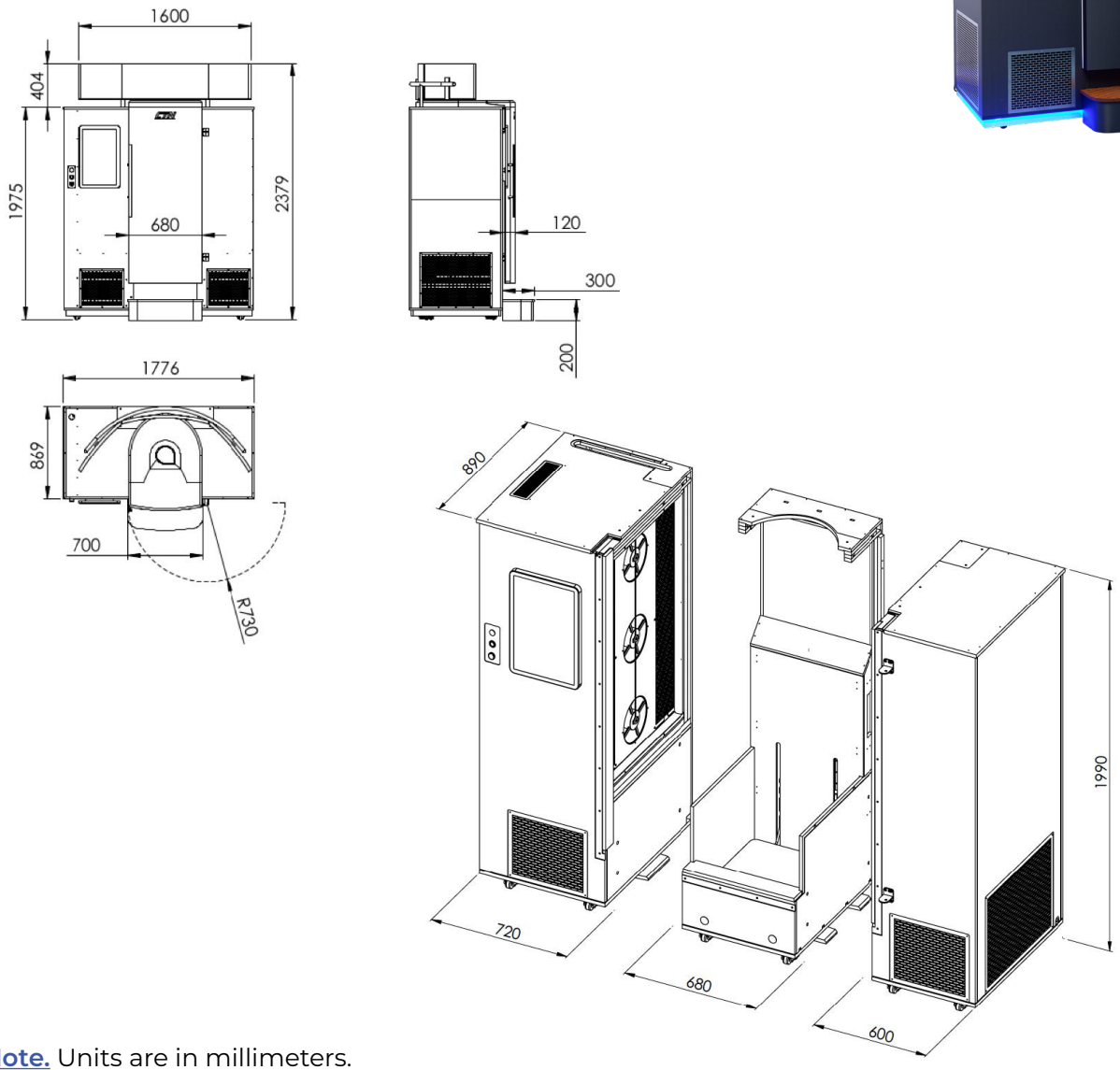

Note. Units are in millimeters.

6. EXTERNAL COMPONENTS

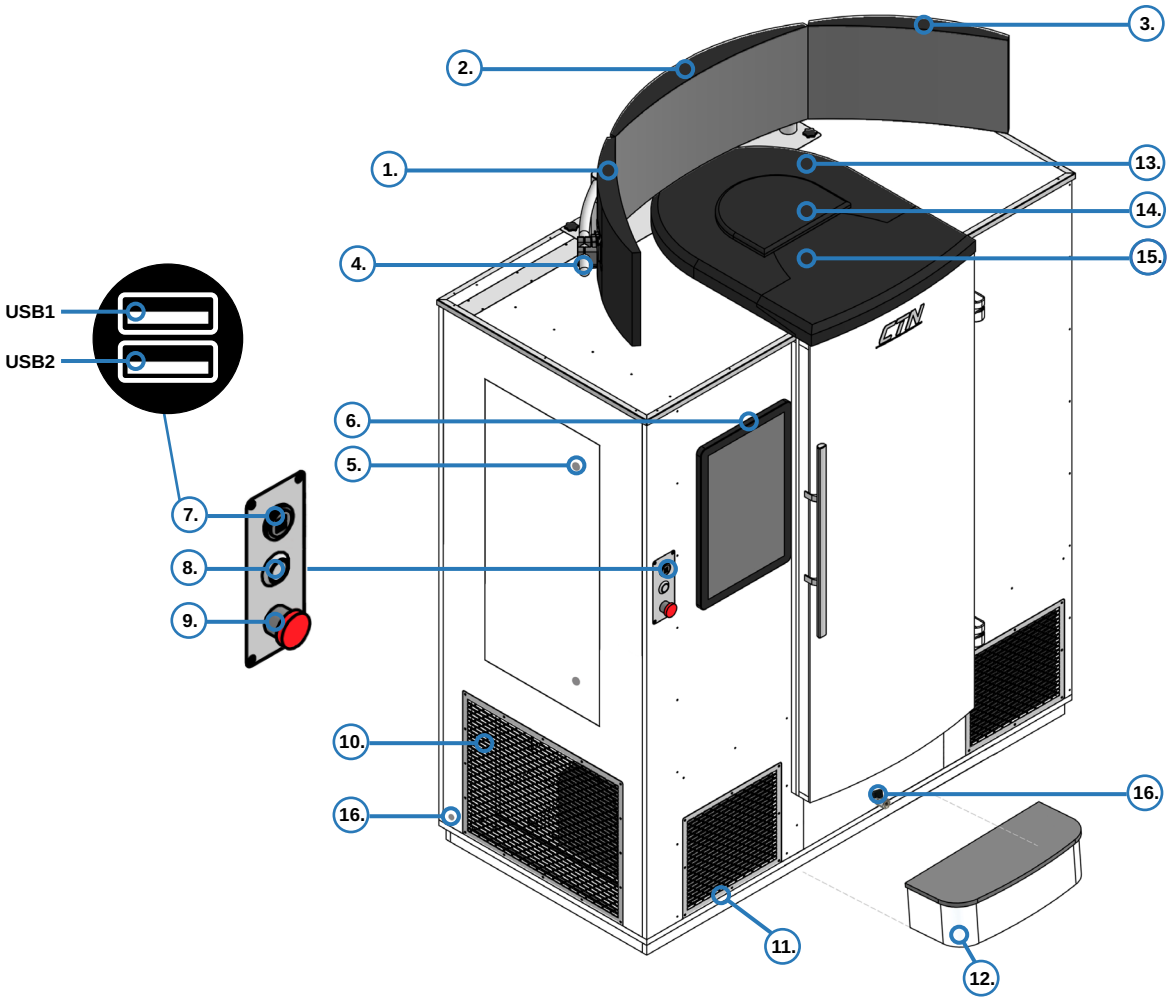

1.	Monitor 1	9.	Emergency switch
2.	Monitor 2	10.	Air vent cover + filter, side
3.	Monitor 3	11.	Air vent cover + filter, front
4.	Monitor frame	12.	Doorstep
5.	Electrical cabinet door	13.	Upper rim
6.	Main monitor	14.	Cabin lid
7.	2x USB port	15.	Upper rim (door)
8.	On/ Off button	16.	Drain valve*

*On older e°CABINs, there is a single drain valve located behind the doorstep. On newer e°CABINs that consist of modules, there is a drain valve on each side of the device.

7. ROOM REQUIREMENTS AND STORAGE

CAUTION: The below requirements must be followed in order to avoid damaging the device.

- The e°CABIN must be installed in a dry, indoor, climate-controlled environment. If the humidity in the operating area can exceed 40% at 24°C/ 75°F, where the air contains more than 10 grams of water vapor per cubic meter, a dehumidifier must be used in the room to avoid damaging the device. **Ensuring that the temperature and humidity requirements for the e°CABIN are met throughout the day is extremely important**, particularly in spa environments, where saunas, pools, showers etc. are present.
The e°CABIN also produces heat and therefore, climate-control is required. The e°CABIN will be more powerful and efficient when the room temperature is lower.

- The room must be well ventilated.

- The device must be positioned on a hard flat surface that is capable of supporting the weight. The device weighs ~800 kg packed and ~700kg unpacked.

- Power supply: 220 - 240 V, 16 A fuse required.

- Ensure adequate space around the device, as indicated in the minimum operating area scheme below, to allow proper airflow.

MINIMUM OPERATING AREA

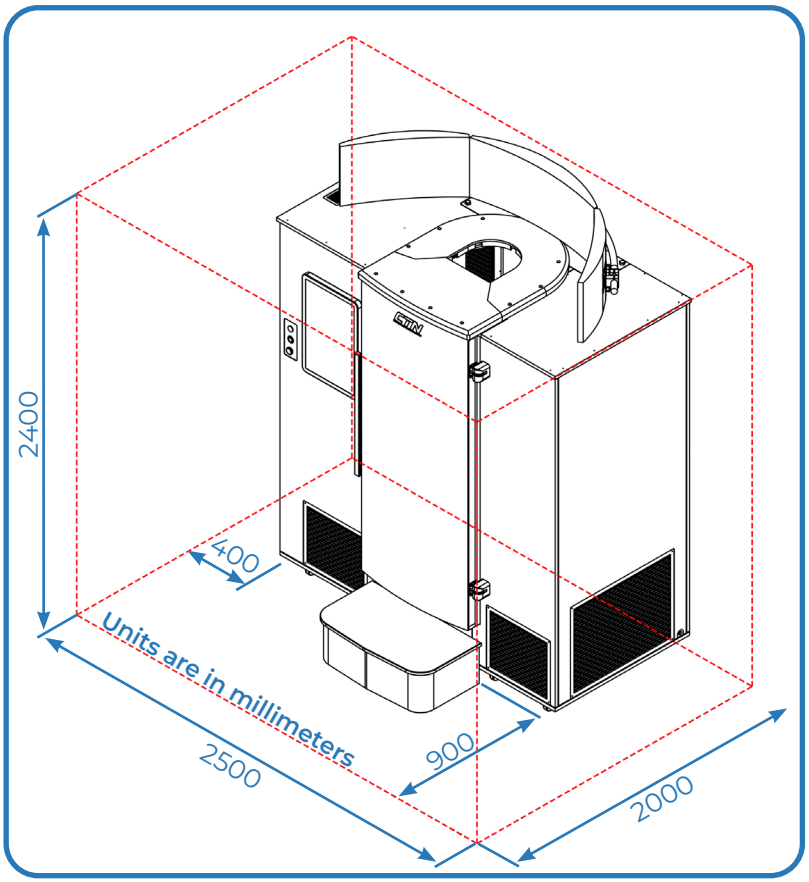

- Do not store the e°CABIN in uncontrolled conditions, especially outdoors, even if the device is still in the delivery crate.

8. ASSEMBLY INSTRUCTIONS

The e°CABIN is preassembled at our factory and only requires minor final assembly steps out-of-the-box. Please follow the step-by-step instructions in this paragraph to complete the final assembly of the e°CABIN. In instances where transporting the preassembled e°CABIN to the final operating area is not possible, our new units can be disassembled into three modules. The disassembly guide is available upon request from our support team: service@ctn.fi.

Step 1.
Carefully remove all of the packaging materials.

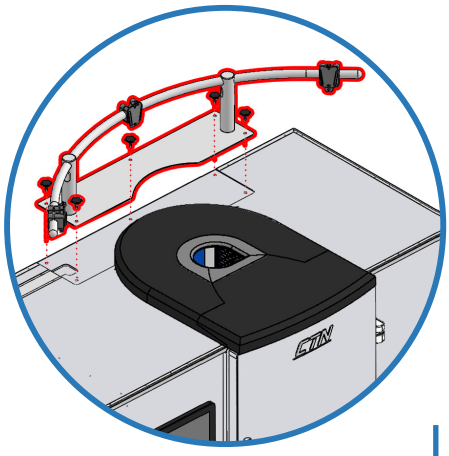

Step 2.
Place the monitor frame on top of the cabin, leaving the monitor cable set out (1x monitor power, 2x DisplayPort, 1x HDMI, 1x speaker power, 1x 3,5mm audio cable). Secure the frame with the provided thumb screws.

Step 3.
Attach the monitors to the pre-installed monitor mounts on the frame. It is easier to safely and correctly line up the monitors if done by 2 people.

Step 4.
Follow the labelling and connect the cables to the monitors:
Monitor 1: DisplayPort, power
Monitor 2: DisplayPort, power
Monitor 3: HDMI, power

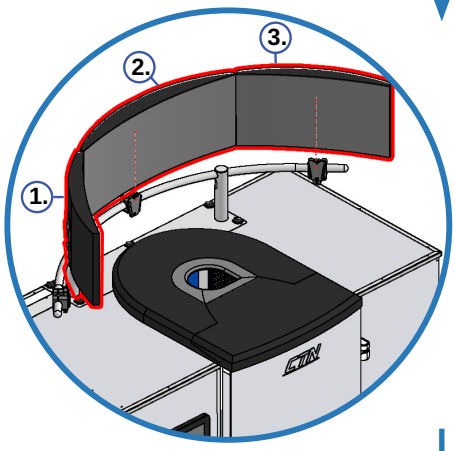

Step 5.
Place the soundbar behind monitor 1.
Connect the 3.5 mm audio cable and the power plug to the soundbar.

Step 6.
Use zip ties to tie the cables to the monitor frame for a cleaner install.

Step 7.
Finally, place the doorstep to its position.

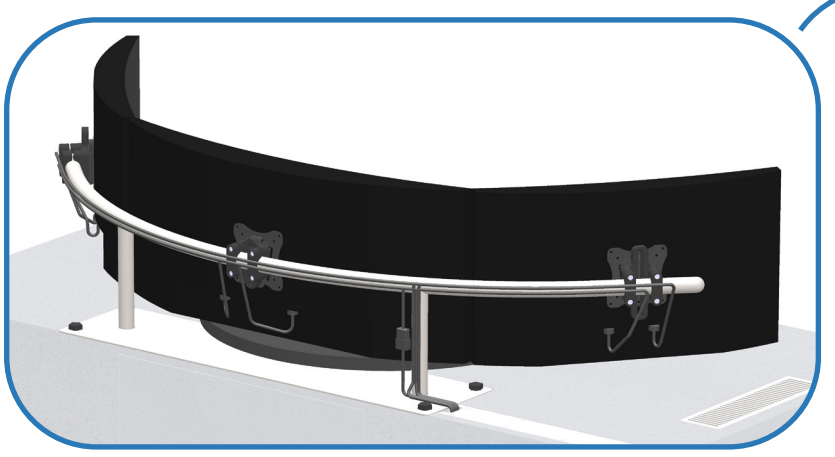



9. INSTRUCTIONS FOR USE

Please follow the step-by-step instructions in this paragraph to learn everything you need to know to use the e°CABIN for the very first time!

9.1 TURNING ON THE e°CABIN

Step 1.
Connect the power cable at the back of the e°CABIN to a power outlet (please refer to the Technical Information paragraph for requirements).

Step 2.
Release the red emergency switch (part nr. 9) by turning it if it is pressed down.

Step 3.
Power on the e°CABIN by pressing the On/Off button (part nr. 8). A blue led light on the button will indicate a successful start-up.

Step 4.
Wait for the e°CABIN user interface log-in screen to appear. This will take a few minutes.

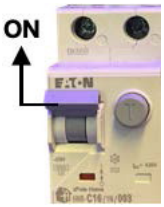

Note. In case the e°CABIN does not power on, first ensure that the emergency switch is released. If it still does not power on, electrical cabinet door on the left side of the cabin (part nr. 5). Make sure that the circuit breaker located at the bottom of the switchboard is in the upright position (the switch is on).

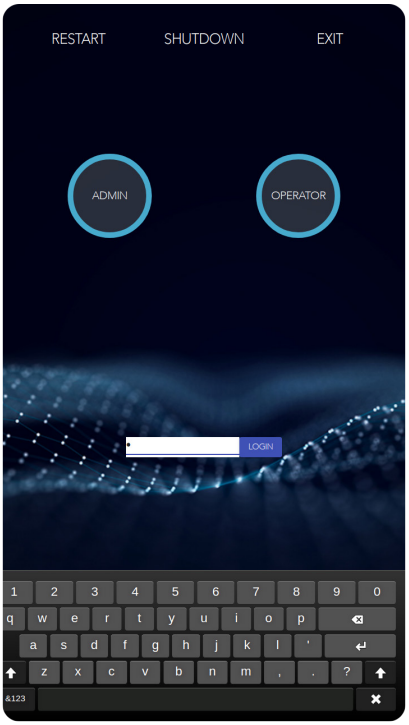

Step 5.
Tap on the **ADMIN** or **OPERATOR** icon, then on the password field to be able to insert the password. The default password for both users is 1. Tap on the **LOGIN** button to proceed.

Recommendation: For everyday use, prefer the OPERATOR account.

Note. If you are setting up the e°CABIN for the very first time, at this point we recommend going through the essential settings presented in paragraphs 10 and 11 before proceeding to step 6.

9.2 PRECOOLING CYCLE

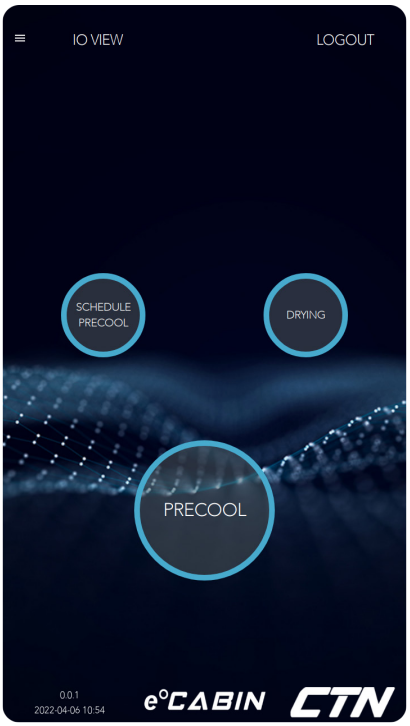

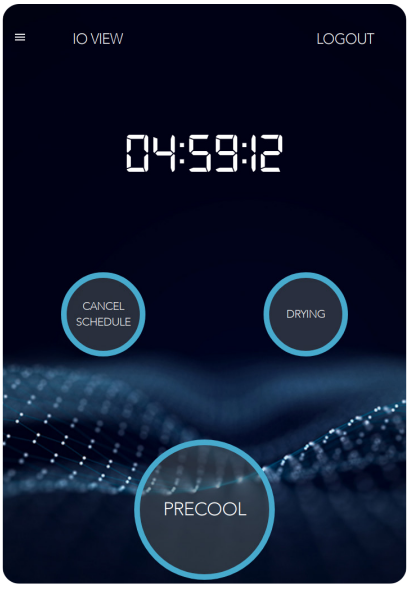

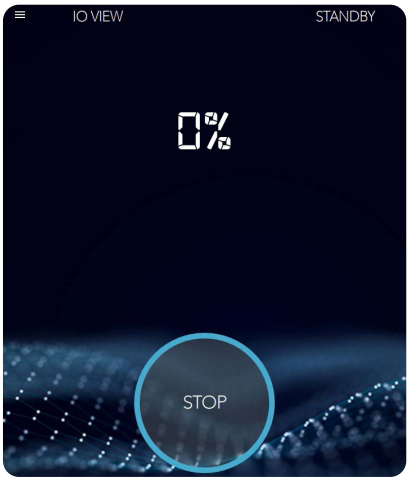

Step 6.
After logging in, the cabin is ready for precooling. Tap on the **SCHEDULE PRECOOL** icon to program the precooling cycle to start at a specific time or **PRECOOL** icon to begin immediately. Ensure that the top cabin lid (part nr. 14) is attached for an efficient precooling.

Note. Please refer to the Drying Cycle paragraph to learn more about the drying function.

SCHEDULE PRECOOL:

- To start a scheduled precool, tap on the calendar icon to open the calendar and choose the start date and time. Tap on the **START SCHEDULED PRECOOL** icon to activate the program.

- If the e°CABIN is connected to the Internet, the desired start time can be chosen from a calendar selection. If the e°CABIN is not connected to the Internet, the desired start time can be chosen by using the slider.

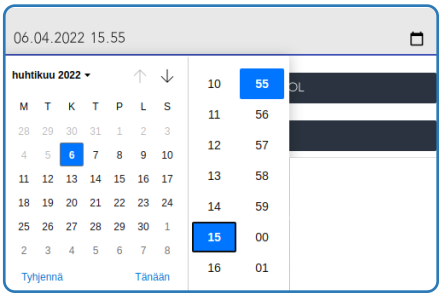

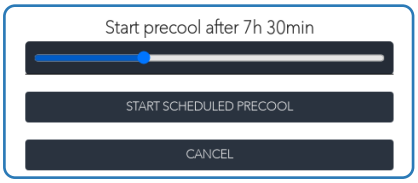

- Remaining time until the start of the precooling cycle will then be displayed on the main screen.

- The scheduled precooling cycle can be canceled at any time by tapping on the **CANCEL SCHEDULE** icon.

PRECOOL: AFTER INITIATING

- Precooling the cabin from room temperature will take ~1,5-2 hours to complete.

- The progress of the precooling stage will be displayed on the screen when the process has begun.

- When the e°CABIN has cooled down to -18°C/-0,4°F, the option to skip the rest of the precooling cycle appears on screen to proceed and begin a session. In case temperature inside rises above that target, the system will automatically start a cooling down process. The full cycle will cool the e°CABIN down to -25°C/ -13°F.



9.3 TREATMENT SESSION & SETTINGS

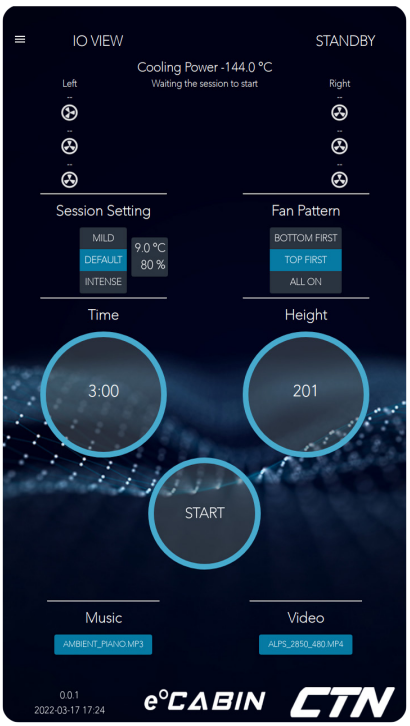

After precooling has been completed, adjust the following settings (Steps 7-10) on the main screen before beginning the cryotherapy session.

Note. Please refer to the Additional Settings and Features paragraph to learn how to choose the preferred temperature scale and system of measurement.

Note. Please refer to the Additional Settings and Features paragraph to learn how to add personal media files to the Music and Video selection.

Step 7.
Choose the preferred Session Setting:

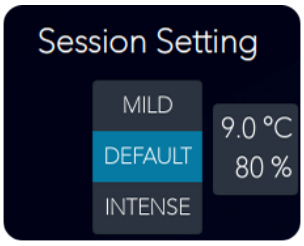

Step 8.
Choose the preferred Fan Pattern



- The Session Setting indicates the intensity of the session and the settings are defined by the below table:

Session Setting	Target Skin Temperature	Fan Intensity
Mild	11°C/ 52°F	60%
Default	9°C/ 48°F	80%
Intense	7°C/ 45°F	100%

- The Fan Pattern will dictate the first ~20 seconds of the session and should be chosen according to personal preference. The purpose of this is to help the body adapt to the cold temperature at the very beginning of the session by starting the fans from the chosen direction first. This setting will not affect the end result as fans will then be controlled by the thermal sensors. The BOTTOM FIRST setting is often our customers' favorite.

Step 9.
Choose the maximum time for the session by tapping on the icon and adjusting the slider.



- The maximum session time is 5 minutes. If the skin reaches the chosen target skin temperature before 2 minutes, the session will automatically end at the two minute mark in MILD and DEFAULT modes. In INTENSE mode, after reaching the target skin temperature, the session can run for up to 30 additional seconds, without exceeding the maximum session duration.

Step 10.
Set the height of the client or user by tapping on the icon and adjusting the slider.

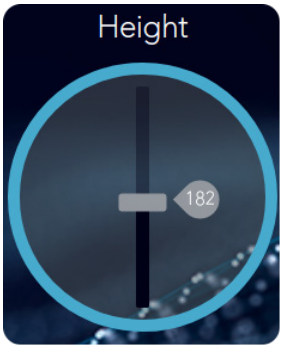

- It will take a few seconds for the lift inside the e°CABIN to move. The indicative lift adjustment range is 157 cm - 197 cm, however it is possible for shorter and taller people to use the e°CABIN. The lift should be adjusted so that the client's neck is positioned in the middle of the head-opening.



Step 11.
Unattach the cabin top lid (part nr. 14) just before starting the treatment session.

Step 12.
Before entering the e°CABIN, please keep the following points in mind:

- The weight capacity of the chamber is up to 150 kg.

- Shoes, gloves, underwear and a scarf/buff should be worn during treatment. The space inside is limited so it is recommended to dress/ undress outside of the cabin.

- The correct body position for the session is facing one of the side monitors and standing still. Wind generated by the fans should target the front and back side of the body as illustrated.

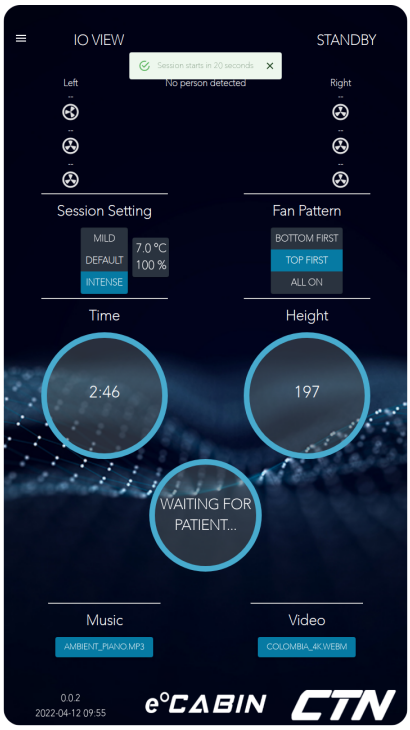

Step 13.
Tap on the **START** icon to begin the session, then enter the cabin/ ask the client to enter the cabin promptly to minimise heat loss while the door is open.

- After pressing the **START** icon, the e°CABIN will wait for 20 seconds for the user to enter the cabin and close the door. The session will start as soon as the door has been closed and the system can detect a person inside.

- If necessary, the session can be stopped by:
  - tapping on the **STOP** icon;
  - opening the door;
  - pressing the EMERGENCY SWITCH (part nr. 9).

Recommendation: When treating a client, kindly ask them to hand you their robe before entering the e°CABIN. Then open the door for the client.

Note. If the lift height feels off/ wrong once the user is inside the cabin, you can still adjust the height.

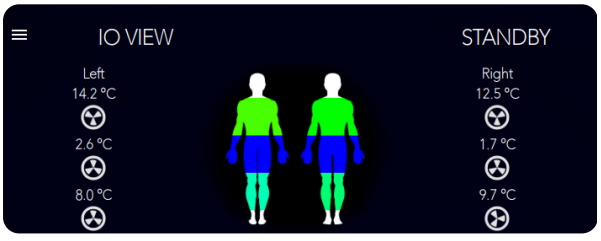

- Skin temperature ratings from six measure points and remaining time will be displayed on the main screen. The fan icons indicate the fan speed of the specific fan. The fan speed is controlled by the thermal sensors and when the measured temperature is close to the set target, the fan speed will decrease.

Note. If a blocked eye icon appears on the screen while in session, one of the sensors is not getting a correct temperature reading. For example, the sensors are sometimes unable to measure skin temperature through covered body areas and will get a reading directly from the fabric, which can have a drastically different temperature compared to measurements from other sensors. In instances where sensors get improper readings, the system will automatically use correct values from other measure points instead to control the session.

Note. If the door remains open for more than 15 seconds, a reminder sound will play.

Step 14.
Exit/ have the client exit the e°CABIN when the session has ended. Close the door and reattach the cabin lid (part nr.14) to avoid cold loss. The **START** button will reappear on the main operational screen to begin a new session. The lift will automatically lower down after the session.

Recommendations:
- When treating a client, open the door for the patient at the end of the session and hand them back their robe.
- A 5-10 minute break is recommended between each treatment session. In case the temperature inside the e°CABIN rises above -18°C due to cold loss, the system will automatically start precooling after a treatment session, which will continue until the temperature has dropped below -18°C again.



9.4 DRYING CYCLE

The drying cycle is required to be run daily after using the e°CABIN.

Step 15.
Remove the cabin lid (part nr. 14) to allow the moisture to evaporate. Make sure that the door is closed and tap on **STANDBY→ DRYING** to begin the process.

- The drying cycle lasts for 4 hours and generates heat inside the e°CABIN. After the drying cycle, the temperature inside will be ~50°/ 122°F. Allow the cabin to dry for another 4 hours without the top cabin lid, so that the warm and moist air can escape.

- The drying cycle and the scheduled precooling function can be activated simultaneously, as indicated in the image. When the precool schedule timer gets to 0, the drying procedure will end and the precooling cycle will begin at the scheduled time. If you are not present when your scheduled precooling begins, just put the cabin lid on when you have the possibility.

Step 16.
(Optional, after drying cycle). Shut down the system by tapping on **STANDBY→LOGOUT→SHUTDOWN**. Wait for a “No signal” message to be displayed on the monitors. Then press the On/Off button (part nr. 8) to fully shut down the system. The blue led light will disappear and indicate a successful shutdown. Leave the door open to let the e°CABIN dry even more.

10. SETTINGS IN THE USER INTERFACE

The settings and options in this paragraph can be accessed through the e°CABIN interface by opening the left side menu.

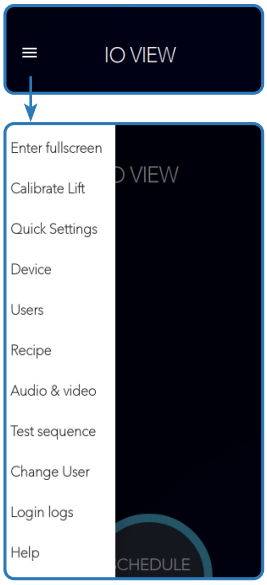

10.1 UNITS OF MEASUREMENT, LANGUAGES & UPDATES

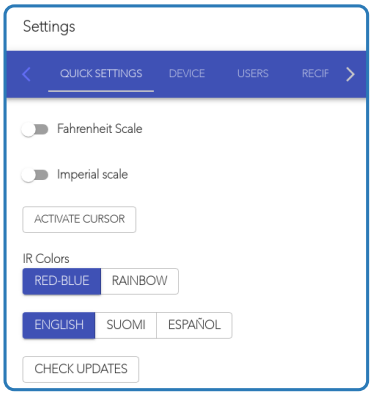

- Tap on the toggle buttons to switch between the Celsius or Fahrenheit scales and imperial or metric values.
- The ACTIVATE CURSOR views the cursor on the user interface.
- IR Color indicates the color schematic used on the body figure while in session.
- Choose a language for the interface
- Check for updates regularly to keep your e°CABIN up to date (Wi-Fi connection required)

10.2 MANAGE USERS

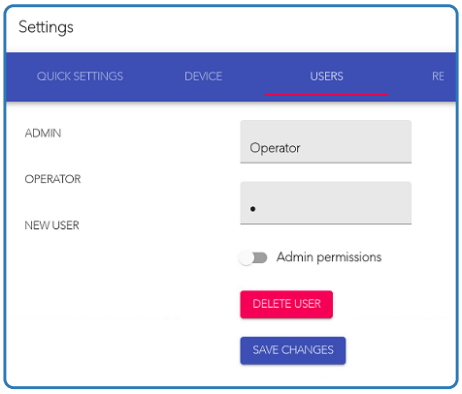

- Here you can add or delete an account.

10.3 AUDIO & VIDEO ADJUSTMENTS

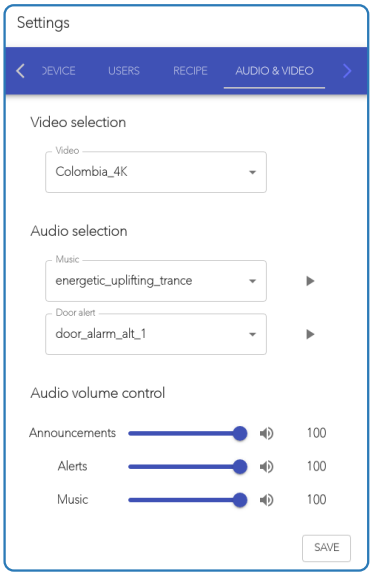

- Select a video to be viewed on the media screens.
- Select a song to be played during a session.
- Select an alert for the door.
- Adjust the volume of announcements, alerts and music.

10.4 CALIBRATE LIFT

In case the lift height feels off for the user/ client, the lift may need to be recalibrated.

- Exit/ have the client exit the e°CABIN if they are inside.
- Tap on the menu icon to reveal the left side menu. Then tap on **Calibrate Lift**.

10.5 IO VIEW

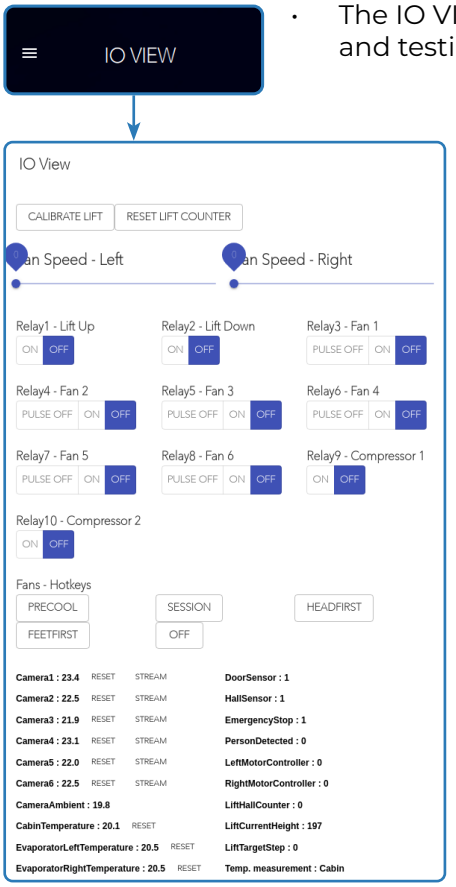

- The IO VIEW is intended for troubleshooting isolated singular components and testing the basic functions.

⚠ **CAUTION.** Please consult with our support team for direct instructions prior to any testing. Do not leave the fans or compressors running after testing.

11. ADDITIONAL SETTINGS & FEATURES

11.1 EXITING AND OPENING THE e°CABIN SOFTWARE

The settings and options in this paragraph require exiting the e°CABIN interface, which can be done by tapping the following buttons: **STANDBY→ LOGOUT→EXIT**.



The interface can be reopened by tapping on the interface icon and then **EXECUTE**.

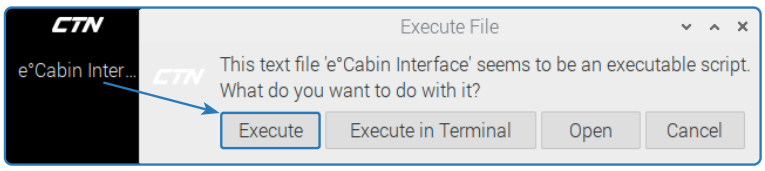

11.2 SYSTEM CLOCK

- To set the system clock, exit the e°CABIN Interface by tapping on the following icons: **STANDBY** → **LOGOUT** → **EXIT**.

- Open the Raspberry Menu, then tap on **Preferences** → **Raspberry Pi Configuration**. From the **Localisation tab**, tap on **Set Timezone**.

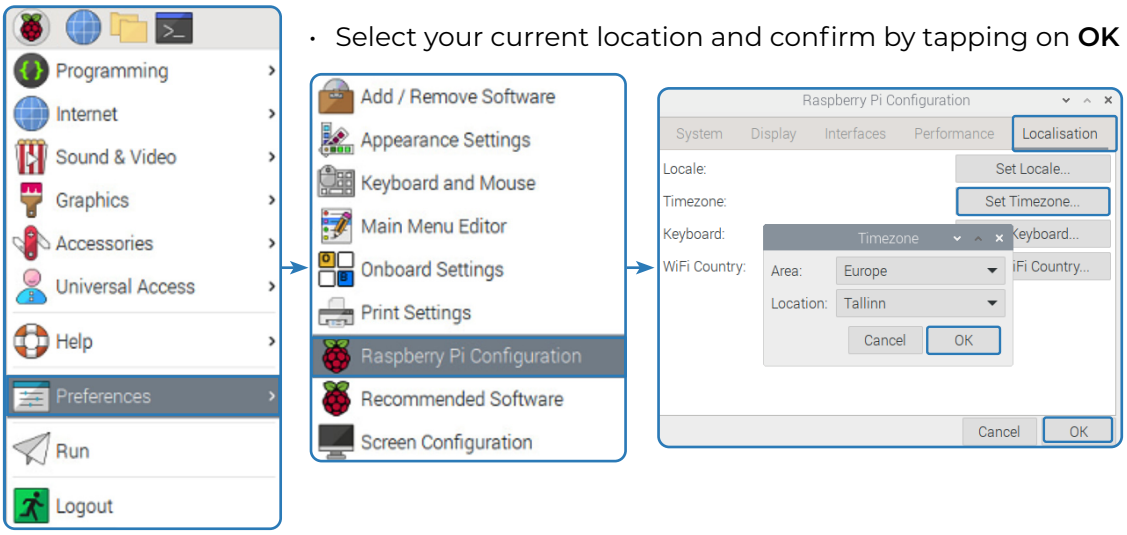

- Select your current location and confirm by tapping on **OK** in both widows.

11.3 CONNECTING WIFI

- Exit the e°CABIN Interface by tapping on **STANDBY**→ **LOGOUT**→**EXIT**.

- Open the Onboard Keyboard (see the corresponding paragraph)

- Tap on the Wi-Fi icon at the top of the desktop.

- Find your network and type in the password.

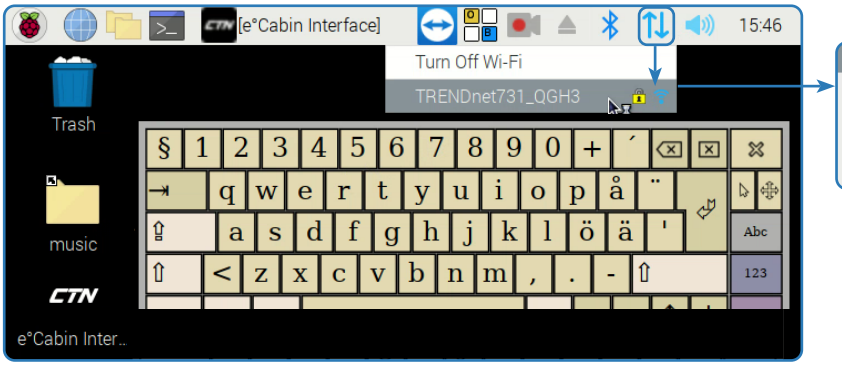

11.4 ONBOARD KEYBOARD

- Open the Raspberry Menu, then tap on **Universal Access** → **Onboard**, to use the on-screen keyboard.

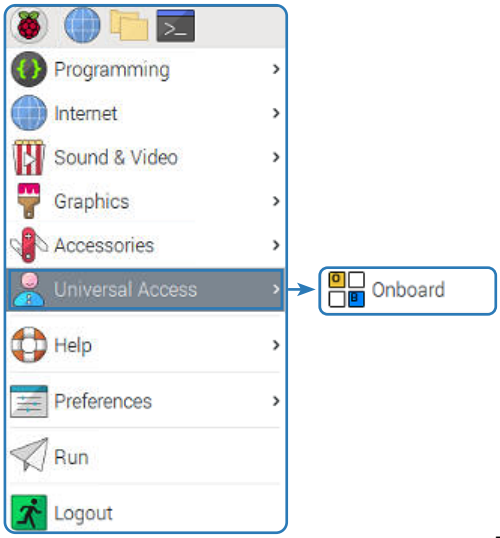

11.5 USING YOUR MEDIA

To add personal media to the Music and Video selection to use during a treatment session, please follow the below steps to upload media to the system:

- Exit the e°CABIN Interface by tapping on the following icons: **STANDBY**→ **LOGOUT**→**EXIT**.
- Plug a USB drive with your video files to the USB2 port (part nr. 7 - USB1).
- A dialog will pop up to open the USB-drive folder with your files.

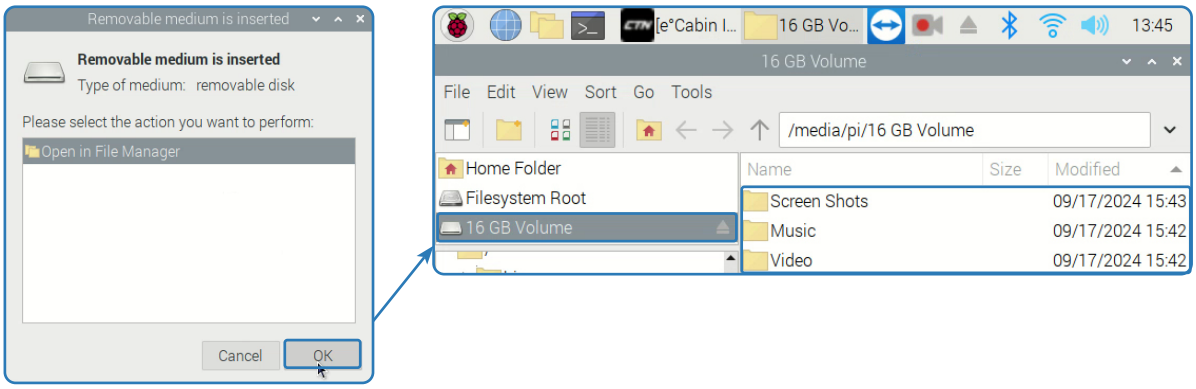

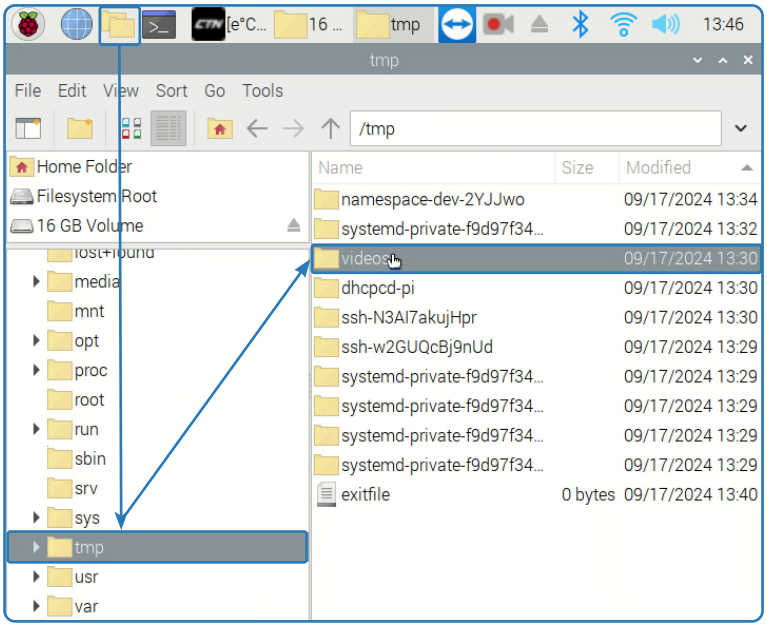

For videos:

- Open another directories window from the taskbar folder icon
- From the left side, scroll down to find a folder called “tmp” and open it. Inside there is a folder for videos.
- Drag the **.MP4** or **.WEBM** video files from the USB drive to this folder. The combined resolution of the media monitors is 6420 x 1080 (5.94 aspect ratio).

Note. Please ensure that your video file title does not have any spaces or other special characters in the title.

- Start the e°CABIN software once the transfer is complete. After login, a transfer icon will appear in about a minute at the top of the interface that indicates that the video is being transferred.
- The icon will flash multiple times. Please wait patiently for a few minutes, until the icon does not reappear anymore. Then restart the e°CABIN software. Your video will now be available from the media selection.

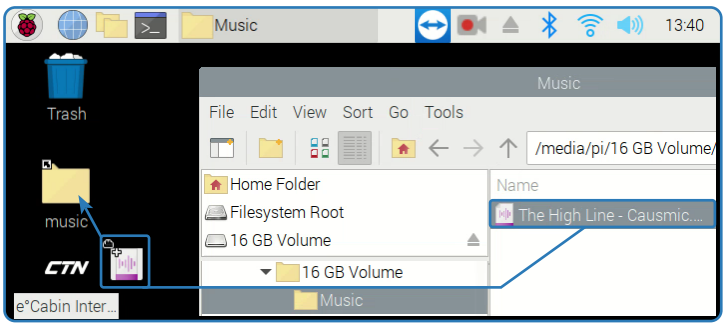

For music:

- Drag the .MP3 files from the USB-drive folder to the Music folder on the desktop.

• When you are done moving the files, eject your USB-Drive by tapping on the eject icon at the top of the screen.

• Open the e°CABIN Interface. Your media should be available from the corresponding selection. In case you do not see your files, please restart the software.

11.6 TEAMVIEWER

Teamviewer is an application that can be used to offer remote diagnostics in the case of a problem with the e°CABIN.

• To open the Teamviewer software, exit from the user interface and access the desktop of the computer by tapping on the following icons: **STANDBY**→ **LOGOUT**→**EXIT**.

• Tap on the Teamviewer icon at the top left corner of the desktop to open the software.

• A special access code will be displayed on the screen that needs to be communicated to the support team. Please note that the e°CABIN needs to be connected to Wi-Fi for this process.

12. MAINTENANCE

• Run the full drying cycle every day the e°CABIN has been used without the top cabin lid (part nr. 14).

• Treat the fabric surfaces inside the e°CABIN with NANO°CLEAN once every 6 months.

• Regularly drain the condensed water from the drain valve. On our older devices, there is a single drain valve located below the door (behind the doorstep, part nr. 16). Newer e°CABINs have two drain valves that are located on each side of the unit.

• Use a vacuum cleaner and/or compressed air to clean the filters and the inside of the e°CABIN from dust. Remove the air vent covers (parts 10, 11) from both sides of the e°CABIN for this process.

• Replace the air vent filters once a year.

13. POSSIBLE CONTRAINDICATIONS

- Raynaud's syndrome
- Cold Allergy / Cryoglobulinemia
- Pregnancy
- Arrhythmia
- Peripheral arterial occlusive disease
- Severe Hypertension (BP> 180/100)
- Venous thrombosis
- Heart attack in the previous 6 months
- Pacemaker
- Valvular heart disease
- Conditions after heart surgery
- Ischemic heart disease
- Vasculitis
- Decompensating disease of the cardiovascular and respiratory system; congestive heart failure, COPD
- DVT or known circulatory dysfunction
- Chronic liver disease
- Unstable angina pectoris
- Acute febrile respiratory (flu like respiratory symptoms)
- Acute kidney and urinary tract diseases
- Severe Anaemia
- Seizure disorders
- Bacterial and viral infection of the skin, wound healing disorders – open sores or discharging wounds
- Polyneuropathies
- Severe claustrophobia

Note. Whenever unsure about any listed or other potential contraindications, the user must consult their doctor or seek medical advice from a treating medical professional before administering any treatments. The user must take full responsibility for their own health and use the device at their own risk.

14. HOW TO WIRE 220V IN A US 110V GRID

To use the CTN e°Cabin™, a voltage conversion from 110V to 220V is needed. A qualified electrician can carry out this work at the site, or, a step up transformer can be used. This guarantees the optimal performance of the unit. Upgrading your circuits mandates a comprehensive rewiring process, so you will need to hire an electrician who knows how to upgrade circuits from 110V to 220V. A qualified electrician can ensure 220-volt service for your premises or extend extra 220-volt circuits for outlets. This will guarantee that modern appliances run safely and
efficiently.

In any standard house, the electricity grid distributes energy at 220 volts. This splinters into two 110-volt lines. The split limits the danger of overloading your appliances and electronics. When upgrading your circuits from 110V to 220V, you will need to understand how to identify 220-volt circuits in a circuit box. If your property is newer, you will be able to tell the difference between the two circuits. The 220-volt circuits are twice the size of the 110-volt circuits. If you are located in an older premises built several decades ago, it likely only has 110V capacity in total. As such, you should upgrade your electric system so you can use modern, professional grade appliances.

Note. A qualified electrician can determine the availability and in the likely event that your circuit box has the 220V already in place, the wiring of a 220V socket will be fast and easy.

CTN RECOVERY TECHNOLOGIES

WORLD'S #1 IN SPORTS RECOVERY

CTN.FI

CTN GROUP - IRELAND - FINLAND - ESTONIA - SPAIN

CTN CENTER - JAAKONKATU 2 - 01620 VANTAA - FINLAND

SALES@CTN.FI ADMIN@CTN.FI SERVICE@CTN.FI

The original language of this manual is English. Other versions are translations.
User manual version: 11.10.2024