Parrot Uncle

CPS1268-A4

CEILING FAN INSTALLATION MANUAL

READ AND SAVE THESE INSTRUCTIONS

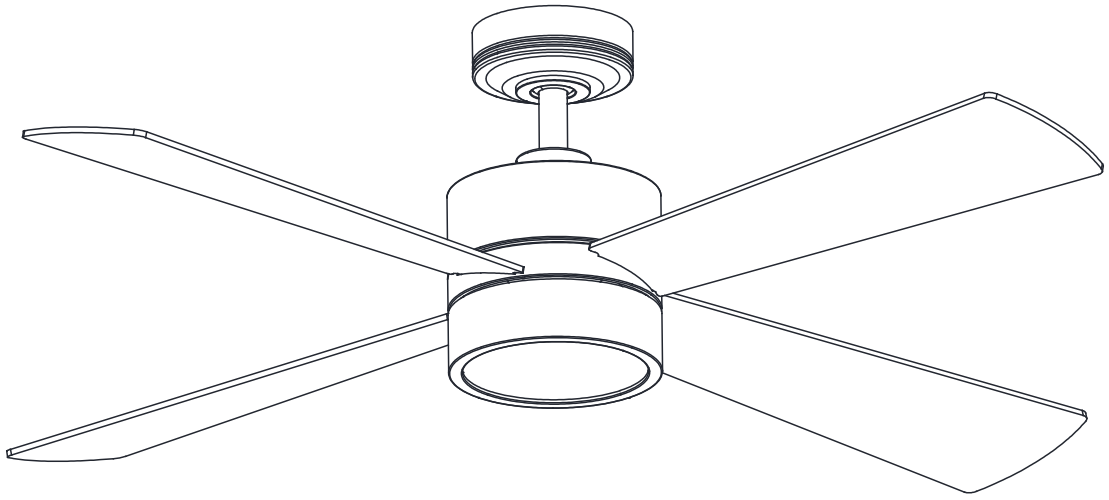

English

www.parrotuncle.com

Parrot Uncle

CPS1268-A4

Installation & Operating Instructions for the
Parrotuncle Owner's Installation, Manual

WARNING: SHUT POWER OFF AT FUSE OR CIRCUIT BERAKER

Safety Information

1. To reduce the risk of electric shock, the electricity has been turned off at the circuit breaker or fuse box before begin.
2. All wiring must be in accordance with the National Electrical Code NASI/NFPA 70 and local electrical codes. Electrical installation should be performed by a qualified licensed electriccian.
3. The outlet box and support structure must be securely mounted and capable of reliably supporting 35lbs(15.9kg). Use only UL listed outlet boxes marked “Acceptable for Fan Support of 35lbs(15.9kg) or less.”
4. The fan must be mounted with a minimum of 7 ft. (2.1m) clearance from the trailing edge of the blades to the floor.
5. Do not operate the reversing switch while the fan blades are in motion. You must turn the fan off and stop the blades before you reverse the blade direction.
6. Do not place objects in the path of the blades.
7. To avoid personal injury or damage to the fan and other items, please be careful when working around or cleaning the fan.
8. After making electrical connections, spliced conductors should be turned upward and pushed carefully up into the outlet box. The wires should be spread apart with the grounded conductor and the equipment-grounding conductor on one side of the outlet box.
9. All set screws must be checked and retightened where necessary before installation.



WARNING: To reduce the risk of personal injury, do not bend the blade during assembly or after installation. Do not insert objects in the path of the blades.



WARNING: Remove the rubber motor stops on the bottom of the fan before installing the blades or testing the motor.



WARNING: To reduce the risk or fire or electric shock, do not use this fan with any solid-state speed control device.



WARNING: To avoid possible electric shock, turn the electricity off at the main fuse box before wiring. If you feel you do not have enough electrical wiring knowledge or experience, contact a licensed electrician.



WARNING: The model or type reference of a luminaire that may be installed in a fan constructed for this purpose.



WARNING: To reduce the risk or fire, electric shock, or personal injury, mount to outlet box marked” Acceptable for fan support of 35 lbs.(15.9 kg) or less” and use the screws provided with the outlet box.

CPS1268-A4

Installation & Operating Instructions for the
Parrotuncle Owner's Installation, Manual

WARNING: SHUT POWER OFF AT FUSE OR CIRCUIT BERAKER

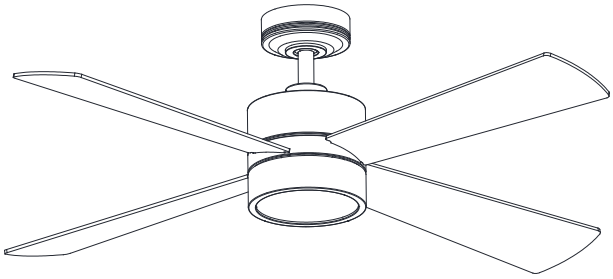

THANK YOU FOR YOUR PURCHASE

Thank you for purchasing this quality product. To ensure correct function and safety, please read and save all instructions before using the product.

SAFETY TIP

1. To avoid possible electric shock, turn off the electricity at the main fuse box or circuit panel before you begin the fan installation or before servicing the fan or installing accessories.

2. Read all instructions and safety information carefully before installing your fan and save these instructions.

3. Make sure all electrical connections comply with local codes or ordinances and the National Electrical Code. If you are unfamiliar with electric wiring, please use a qualified and licensed electrician.

4. Make sure you have a location selected for your fan that allow clear space for the blades to rotate, and at least seven(7) feet of clearance between the floor and the fan blade tips. The fan should be mounted at least thirty (30) inches from walls or other up right structures.

5. WARNING: To reduce the risk of fire, electric shock or personal injuy, mount to outlet box marked "acceptable for fan support" and use mounting screws provided with the outlet box most outlet boxes commonly used for the support of lighting fixtures are not acceptable for fan support and may need to be replaced. Consulta qualified electrician if in doubt.

6. After installation is complete, check that all connections are absolutely secure.

7. After making electrical connections, spliced conductors should be turned upward and pushed carefully up into outlet box. The wires should be spread apart with the grounded conductor and the equipment-grounding conductor on one side of the outlet box.

8. WARNING: To reduce the risk of electrical shock and fire, do not use this fan with any solid-state fan speed control device, or rheostat.

9. Do not insert anything into the fan blades while they are rotating.

10. WARNING: To reduce the risk of personal injury, do not bend the blade during assembly or after installation.Do not insert objects in the path of the blades.

11. To avoid personal injury or damage to the fan and other items, be cautious when working around or cleaning the fan.

12. Do not use water or detergent when cleaning the fan or fan bades. A dry dust cloth or lightly dampened cloth will be suitable for most cleaning.

NOTE: The important safety precautions and instructions appearing in the manual are not meant to cover all possible conditions and situations that may occur. It must be understand that common sense and caution are necessary factors in the installation and operation and operation of this fan.

NOTE: This productis not intended for use by persons (including children) with reduced physical, sensory or mental capabilities are different or are impaired, or lack of experience or knowledge, unless such persons are supervised or trained to operate the appliance by a person responsible for their safety.

NOTE: Children should be supervised to ensure that they do not use appliances as a toy.

TECHNICAL INFORMATION

SKU#	Rated Voltage	Rated Power (motor)	Light
CPS1268-A4	120 VAC	35W, Max. 0.5A	LED MAX.22W (included)

CPS1268-A4

Installation & Operating Instructions for the
Parrotuncle Owner's Installation, Manual

WARNING: SHUT POWER OFF AT FUSE OR CIRCUIT BERAKER



3"Wood screws (4PCS)



Washer (4PCS)



Plastic wire nut (4PCS)



Mounting screws (2PCS)



Spring washer (2PCS)

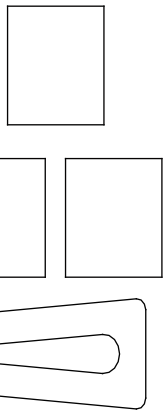

Balance kit (1SET)



Blade Screw (13PCS)



Washer (13PCS)

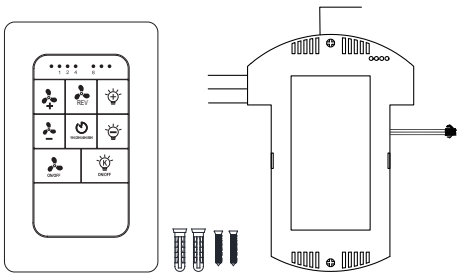

Remote control (1SET)

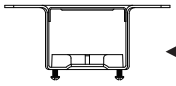

Slide-on mounting bracket

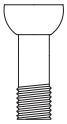

4.5" Ball/downrod assembly

8" Downrod (standby)

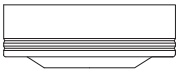

Canopy

Canopy cover



Coupling cover

Hanging pin

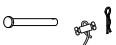

"R" Locking pin

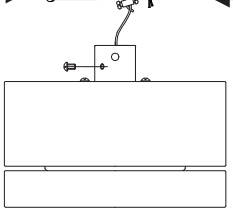

Fan-motor assembly

Blade(4PCS)



Light kit

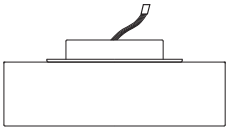

Pls check whether above accessories are completed or not? Yes, and install.

CPS1268-A4

Installation & Operating Instructions for the
Parrotuncle Owner's Installation, Manual

WARNING: SHUT POWER OFF AT FUSE OR CIRCUIT BERAKER

1 INSTALLING THE MOUNTING BRACKET:

The ceiling fan must be installed in a location so that the blades are 12” (300mm) spacing from the tip of the blade to the nearest objects or walls. When hanging the Fan REMEMBER to turn off the power. Follow the instruction below to hang your fan properly:

1. For wood ceiing, secure the mounting bracket to the ceiling is capable of carrying a load of at least 35lbs (15.9 kgs) with four long wood screws and washers provided. Be sure at least 0.12” (30mm) of the screw is threaded into the support.

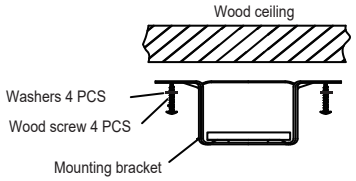

Note: Check whether it is securely installed.

2 .For installing to junction box, secure the junction box directly to the building structure. Use appropriate fasterners and building materials. The junction box and its support must be able to fully support the moving weight of the fan (at least 35lbs). Use a UL listed metal junction box (Not Included). Do not use a plastic junction box. Figure1 & 2 examples to mount the junction box (Not Included).

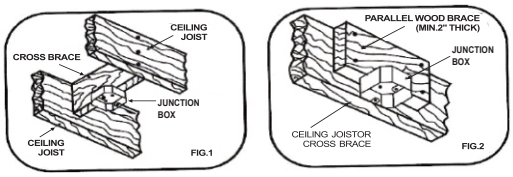

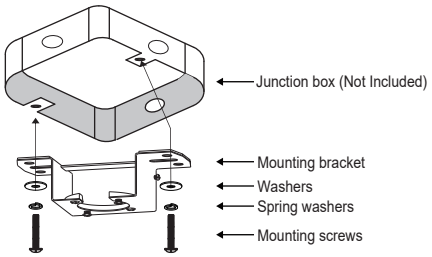

2

Use a Phillips screwdriver to loosen the screw in the direction of the arrow shown in the figure, and place the screw for subsequent installation.

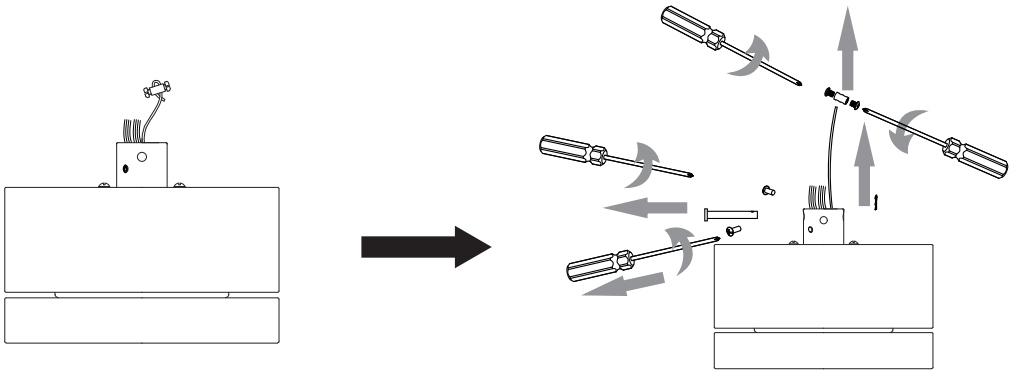

Phillips screwdriver

3

Install the standby downrod assembly of the product as shown in the diagram.

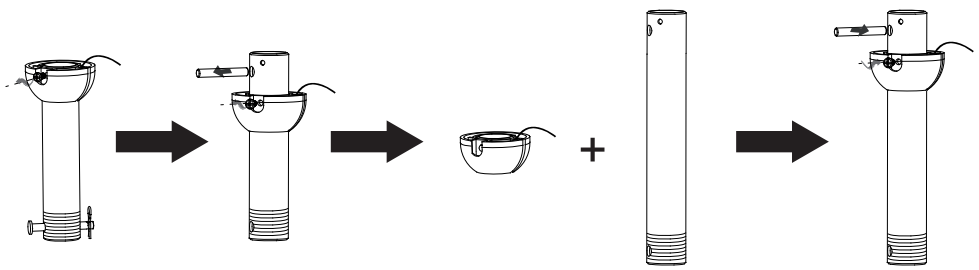

Phillips screwdriver

Parrot Uncle

CPS1268-A4

Installation & Operating Instructions for the
Parrotuncle Owner's Installation, Manual

WARNING: SHUT POWER OFF AT FUSE OR CIRCUIT BERAKER

4

Install the suspension system components of the product as shown in the diagram.

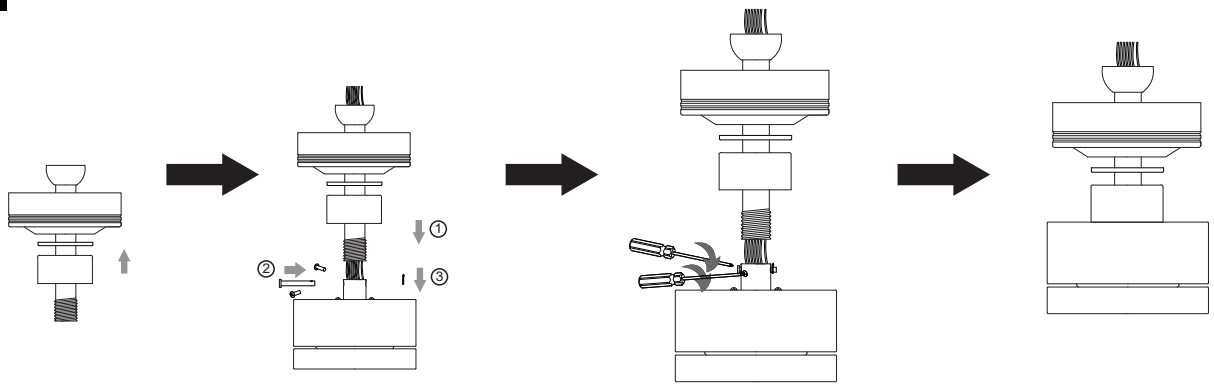

⊕ Phillips screwdriver

5

Carefully lift the fan motor assembly onto the mounting bracket that was attached to the outlet box. Turn the entire assembly until the check tab (stopper of bracket) drops into the notch of the downrod ball and seats firmly.

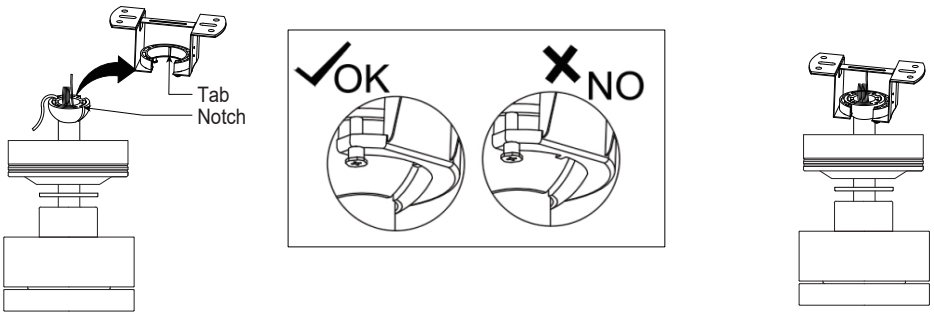

6

Install the safety rope.

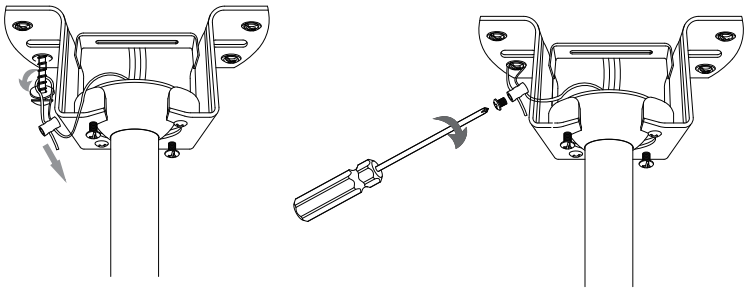

⊕ Phillips screwdriver

Parrot Uncle

CPS1268-A4

Installation & Operating Instructions for the
Parrotuncle Owner's Installation, Manual

WARNING: SHUT POWER OFF AT FUSE OR CIRCUIT BERAKER

7

Connect the wires of the fan main unit with remote controller, connect the remote controller to the power supply using wire nuts.

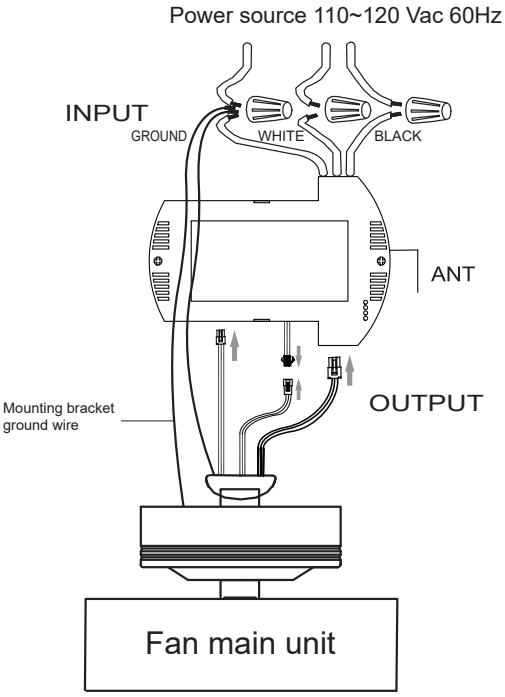

Carefully insert the receiver above the hanger ball in the remainder spacing of the mounting bracket.
Take care not to damage or loosen any of the wiring.

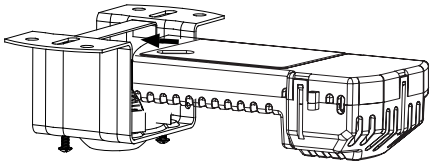

8

Install the canopy to the screws of the mounting bracket, tighten the screws and cover the canopy cover.

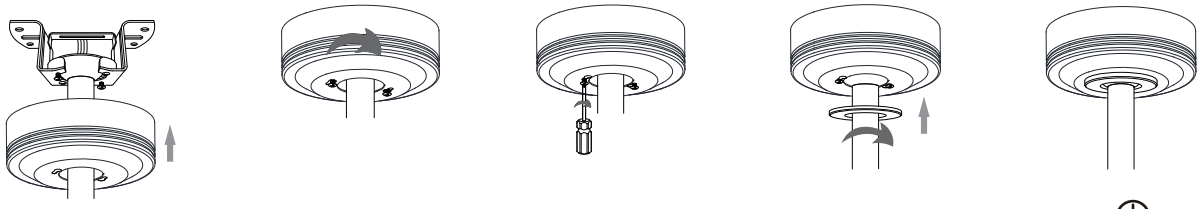

Phillips screwdriver

9

Insert the blade into the slot of rotating member of fan motor assembly.Align and engage the holes of the blade to the fan motor assembly.Secure the blade to the fan motor assembly by tightening the 3 blade screws . Ensure all screws are tightened evenly to reduce the chance of warping or unbalancing.Take care not to over tighten the screws, as this can damage the blades.
Repeat the same process for the other blades.

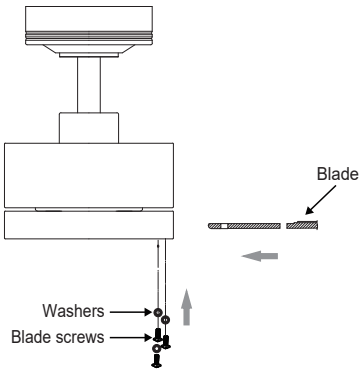

Phillips screwdriver

Parrot Uncle

CPS1268-A4

Installation & Operating Instructions for the
Parrotuncle Owner's Installation, Manual

WARNING: SHUT POWER OFF AT FUSE OR CIRCUIT BERAKER

10 Connect the wires of the fan motor assembly with the light kit. Install the light kit on the fan assembly then secure it by turning clockwise.

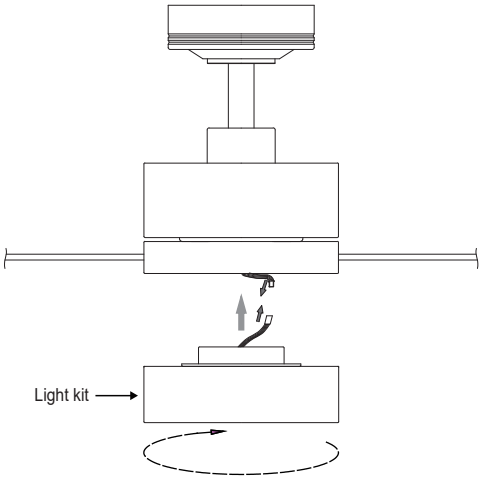

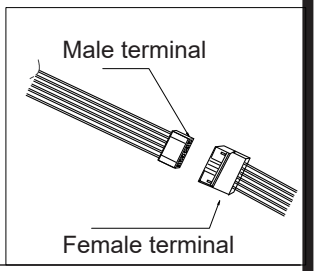

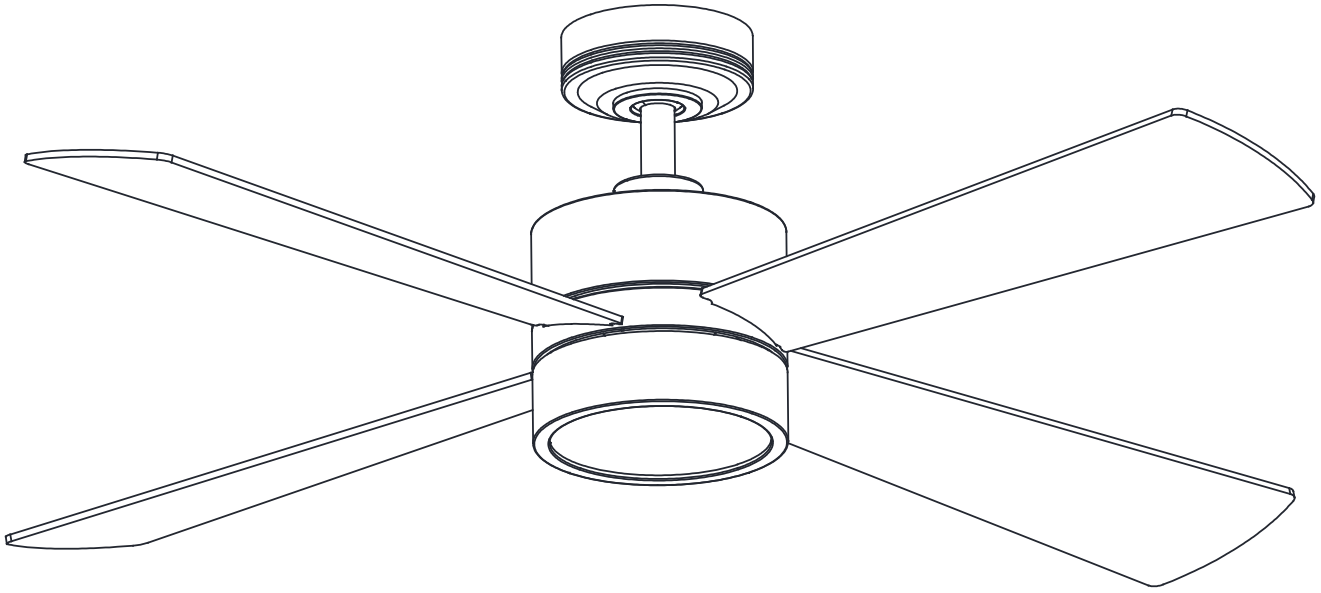

CPS1268-A4

Installation & Operating Instructions for the
Parrotuncle Owner's Installation, Manual

WARNING: SHUT POWER OFF AT FUSE OR CIRCUIT BERAKER

Remote controller

INSTRUCTION OF INSTALLATION AND OPERATION

1. INSTALLING RECEIVER IN FAN:
   a. Remove power from the circuit.
   b. Remove ceiling fan canopy from the mounting bracket.
   c. Disconnect existing wiring between ceiling fan and Supply in electrical junction box.
   d. Make connections as follows, using the wire nuts supplied.

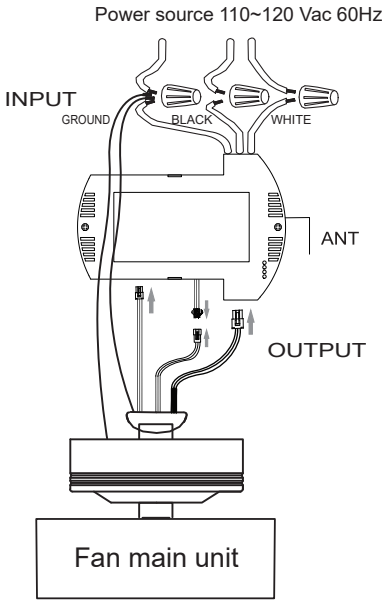

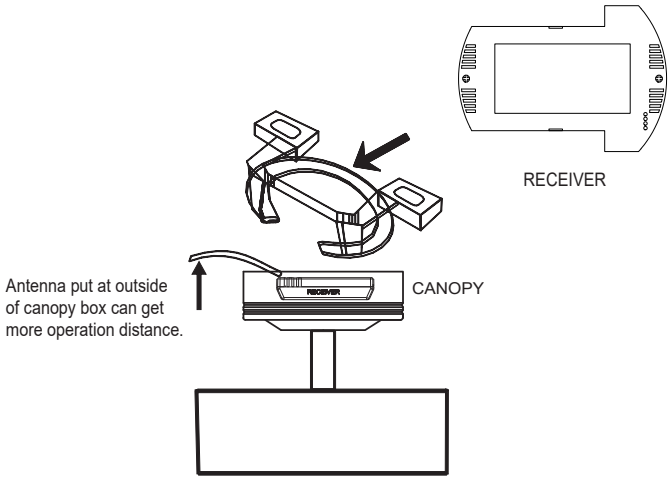

Step 1: Wiring the receiver to the house hold wiring.
1. Connect the green mounting bracket and ball/downrod assembly wires to the house hold ground wire (this may be a green or bare wire) using a wire connecting nut.
2. Connect the receiver black wire to the house hold black (hot) wire using a wire connecting nut.
3. Connect the receiver white wire to the house hold white wire (neutral) using a wire connecting nut. Secure each wire connecting the nut using electrical tape.
Step 2: Wiring the fan to the receiver.
1. Connect the wires from the fan motor assembly to the receiver.
Step 3: Make sure the antenna is not squeezed.

If other fans or supply wires are different color, have this unit installed by qualified licensed electrician.
a. Push all connected wires up into junction box.
b. Lay the brown antenna wire on top of the receiver, and put the receiver into the mounting bracket.
c. Reinstall the canopy on the mounting bracket.
d. Restore power.
e. Install CR2032, 3V battery. (To prevent damage to transmitter, remove the battery if not used for a long time).
f. Store the transmitter away from excessive heat or humidity.

CPS1268-A4

Installation & Operating Instructions for the
Parrotuncle Owner's Installation, Manual

WARNING: SHUT POWER OFF AT FUSE OR CIRCUIT BERAKER

2. OPERATING TRANSMITTER:

Operating the buttons on the panel of the transmitter.

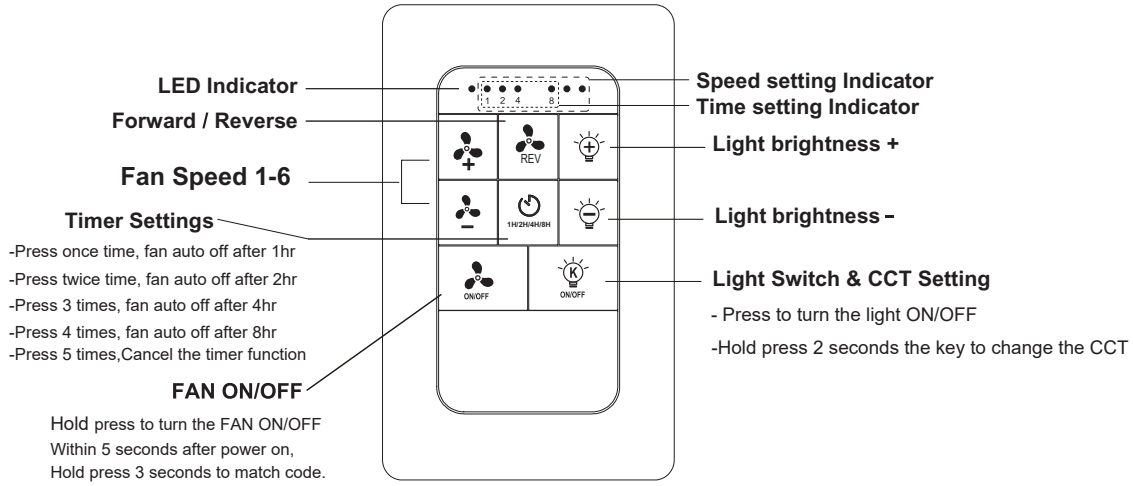

Clear Code: Hold press the ON/OFF + ON/OFF 3 seconds to clear code within 5 seconds after power on.

OPERATION DISTANCE WITHIN 20 FEET

YOUR REMOTE NOW HAS FULLCONTROL OF THE FAN AND LIGHT

3.TROUBLE SHOOTING GUIDE

a.Power to receiver ?
b.Receiver wired correctly ?
c.Fan manual speed control in highest position ?
d.Light kit switch turned on ?
e.Good battery in the transmitter ?

4.INSTALL CR2032, 3V BATTERY.

1.Remove the panel from the transmitter and then install one 2032 battery (included). You need to use a screwdriver to open or close the battery cover. To prevent damage to transmitter, remove the battery if not use for long periods of time.

WARNING: Chemical Burn Hazard. Keep batteries away from children.

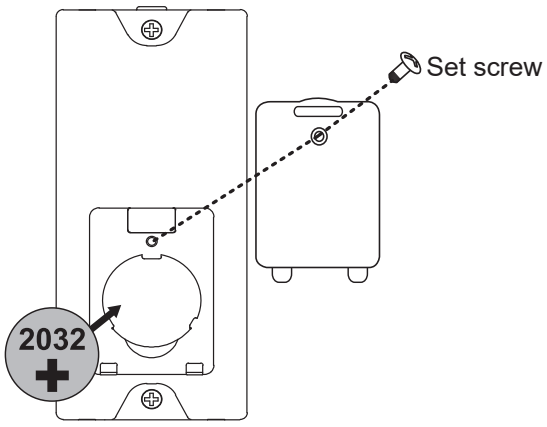

CPS1268-A4

Installation & Operating Instructions for the
Parrotuncle Owner's Installation, Manual

WARNING: SHUT POWER OFF AT FUSE OR CIRCUIT BERAKER

FCC Statement:
1.This device complies with Part 15 of the FCC Rules. Operation is subject to the following two conditions: (1) This device may not cause harmful interference. (2)This device must accept any interference received, incduding interference that may cause undesired operation.
2. Changes or modifications not expressly approved by the party responsible for compliance could void the user's authority to operate the equipment.

NOTE:This equipment has been tested and found to comply with the limits for a Class B digital, pursuant to Part 15 or the FCC Rules. These limits are designed to provide reasonable protection against harmful interference in a residential installation. This equipment generates, uses and can radiate radio frequency energy and, if not installed and used in accordance with the instructions, may casue harmful interference to radio communications.
However, there is no guarantee that interference will not occur in a particular installation. If the equipment does cause harmful interference to radio or television reception, which can be determined by turning the equipment off and on, the user is encouraged to try to correct the interference by one or more of the following measures:
---Reorient or relocate the receiving antenna.
---Increase the separation between the equipmentand receiver.
---Connect the equipment into an outlet on a circuit different from that to which the receiver is connected.
---Consult the dealer or an experienced radio/TV technician for help.

WARNING
TO REDUCE THE RISK OF SHOCK.THIS FAN MUST BE INSTALLED WITH A WALL CONTROL/SWITCH.
DO NOT install this fan with variable speed wall control or wall-mounted dimmer switch. It will permanently damage the fan's remote controland cause the fan's function to fail.


NO Variable speed wall control


NO Dimmer switch

FCC Warning

This device complies with Part 15 of the FCC Rules. Operation is subject to the following two conditions:
(1) This device may not cause harmful interference, and (2) this device must accept any interference received, including interference that may cause undesired operation.

NOTE 1: This equipment has been tested and found to comply with the limits for a Class B digital device, pursuant to part 15 of the FCC Rules. These limits are designed to provide reasonable protection against harmful interference in a residential installation. This equipment generates, uses and can radiate radio frequency energy and, if not installed and used in accordance with the instructions, may cause harmful interference to radio communications. However, there is no guarantee that interference will not occur in a particular installation. If this equipment does cause harmful interference to radio or television reception, which can be determined by turning the equipment off and on, the user is encouraged to try to correct the interference by one or more of the following measures:
-Reorient or relocate the receiving antenna.
-Increase the separation between the equipment and receiver.
-Connect the equipment into an outlet on a circuit different from that to which the receiver is connected.
-Consult the dealer or an experienced radio/TV technician for help.

NOTE 2: Any changes or modifications to this unit not expressly approved by the party responsible for compliance could void the user's authority to operate the equipment.

The device has been evaluated to meet general RF exposure requirement. The device can be used in portable exposure condition without restriction.

Parrot Uncle

CPS1268-A4

Installation & Operating Instructions for the
Parrotuncle Owner's Installation, Manual

WARNING: SHUT POWER OFF AT FUSE OR CIRCUIT BERAKER

⚠ WARNING

- **INGESTION HAZARD:** This product contains a button cell or coin battery.
- **DEATH** or serious injury can occur if ingested.
- A swallowed button cell or coin battery can cause **Internal Chemical Burns** in as little as 2 hours.
- **KEEP** new and used batteries **OUT OF BEACH OF CHILDREN**
- **Seek immediate medical attention** if a battery is suspected to be swallowed or inserted inside any part of the body.



Remove and immediately recycle or dispose of used batteries according to local regulations and keep away from children. Do NOT dispose of batteries in household trash or incinerate.

Even used batteries may cause severe injury or death.

Call a local poison control center for treatment information.

Compatible battery type is CR2032, 3V.

Ensure the batteries are installed correctly with regard to polarity (+ and -).

Do not mix old and new batteries, different brands or types of batteries, such as alkaline, carbon-zinc, or rechargeable batteries.

Non-rechargeable batteries are not to be recharged. Exhausted batteries are to be removed from the product.

Do not force discharge, recharge, disassemble, heat above (manufacturer's specified temperature rating) or incinerate. Doing so may result in injury due to venting, leakage or explosion resulting in chemical burns.

Remove and immediately recycle or dispose of batteries from equipment not used for an extended period of time according to local regulations.

Always completely secure the battery compartment. If the battery compartment does not close securely, stop using the product, remove the batteries, and keep them away from children.



WARNING INGESTION HAZARD: This product contains a button cell or coin battery.

FCC Statement:
1.This device complies with Part 15 of the FCC Rules. Operation is subject to the following two conditions: (1) This device may not cause harmful interference. (2)This device must accept any interference received, incduding interference that may cause undesired operation.
2. Changes or modifications not expressly approved by the party responsible for compliance could void the user's authority to operate the equipment.
NOTE:This equipment has been tested and found to comply with the limits for a Class B digital, pursuant to Part 15 or the FCC Rules. These limits are designed to provide reasonable protection against harmful interference in a residential installation. This equipment generates, uses and can radiate radio frequency energy and, if not installed and used in accordance with the instructions, may casue harmful interference to radio communications.
However, there is no guarantee that interference will not occur in a particular installation. If the equipment does cause harmful interference to radio or television reception, which can be determined by turning the equipment off and on, the user is encouraged to try to correct the interference by one or more of the following measures:
---Reorient or relocate the receiving antenna.
---Increase the separation between the equipmentand receiver.
---Connect the equipment into an outlet on a circuit different from that to which the receiver is connected.
---Consult the dealer or an experienced radio/TV technician for help.
WARNING
TO REDUCE THE RISK OF SHOCK.THIS FAN MUST BE INSTALLED WITH A WALL CONTROL/SWITCH.

Parrot Uncle

CPS1268-A4

Installation & Operating Instructions for the
Parrotuncle Owner's Installation, Manual

WARNING: SHUT POWER OFF AT FUSE OR CIRCUIT BERAKER

PRODUCT SIZE

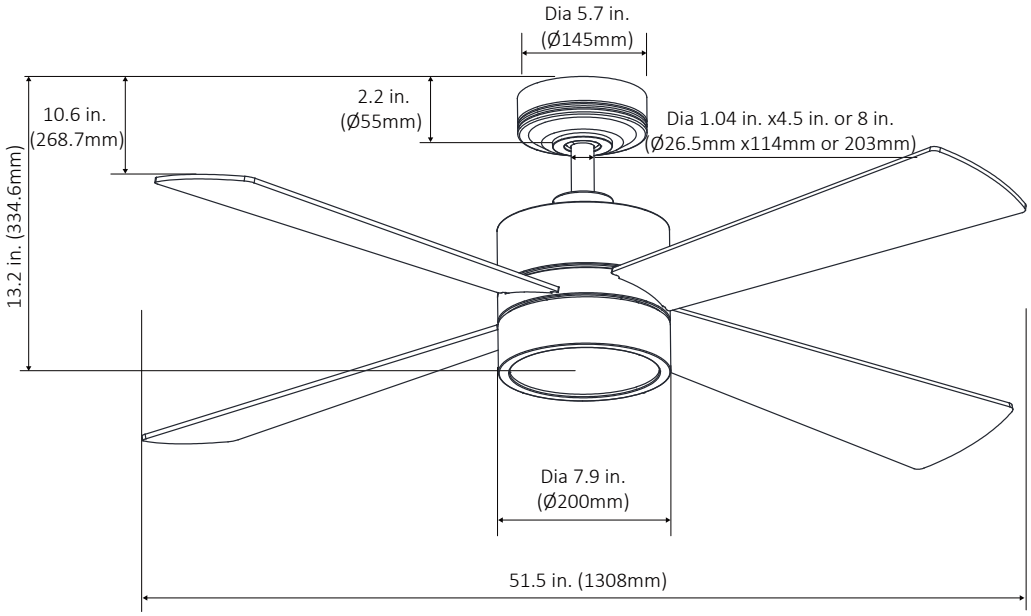

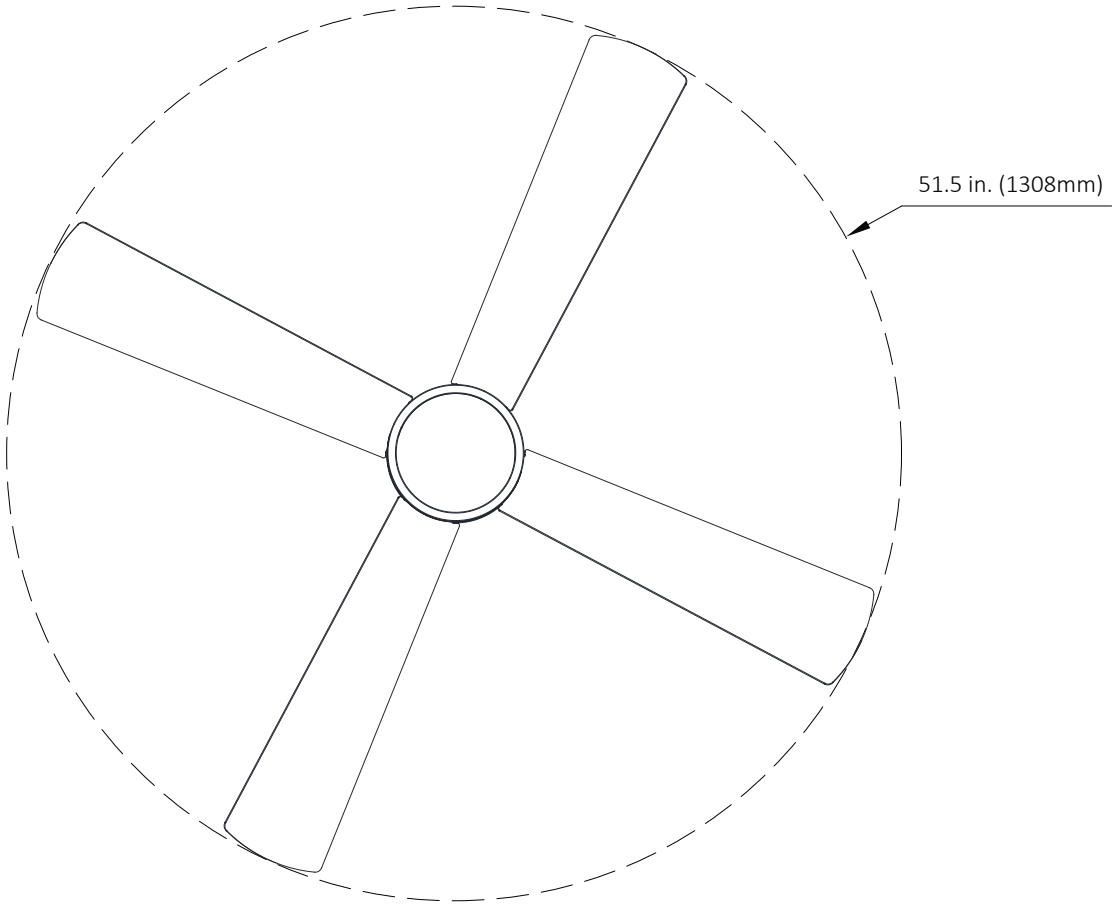

WARNING: SHUT POWER OFF AT FUSE OR CIRCUIT BERAKER

TROUBLESHOOTING GUIDE

Table of Contents

1. Fan / Remote is not working
2. Fan is noisy
3. Fan Wobbles
4. Light is not working

Please refer to the instruction sheet for detailed directions and descriptions of installation steps and requirements

1. FAN / REMOTE IS NOT WORKING

Ensure the remote is within the 20 feet range of the receiver
To reset the remote control: 1) Turn off power to fan using the wall switch or circuit breaker. 2) Remove batteries from remote. 3) Wait 10 seconds. 4) Replace batteries and turn power on
Check batteries to insure they are good and oriented correctly
Check to make sure the frequency switches (DIP Switches) from the remote to the receiver are set to the same frequency
Check the main and branch circuit fuses or breakers
If using a Variable Speed Wall Switch, ensure it is specifically designed for use with a ceiling fan.
Check the line wire connections to the fan and the switch wire connections in the switch housing per the instructions
If fan still does not work, please contact Customer Service **Support@parrotuncle.com**

2. THE FAN IS NOISY

Make sure all motor housing screws are tightened
Make sure the screws that attach fan blade to motor are tight
Make sure the wire nut connectors are not rattling against each other or the interior wall of the switch housing
Allow 24-hour break in period. Most noises associated with the new fan may disappear during this time
If using a ceiling light kit, make sure the glassware is secured tightly
Make sure there is a short distance/gap from the ceiling to the top of the canopy. The canopy should not touch the ceiling!
Make sure your ceiling box is secure and that the rubber isolator pads are used between the mounting bracket and outlet box

3. THE FAN WOBBLES

Verify all blades and blade bracket screws are secure (most fan wobble problems are caused by loose parts). Once fan is properly installed, run the ceiling fan for 10 minutes to let the fan self-adjust.
If wobble occurs after running the fan for 10 minutes, verify blade level using the following process: a) select a point on the ceiling above the tip of one of the blades. Then select the fan blade and measure from the center of the selected blade to point on the ceiling. Rotate the fan until the next blade is positioned and repeat the measurement using the same point from the ceiling for every blade. Measurements should be within 1/8 inch. b) If all deviation are less than 1/8 inch and the fan continues to wobble, please contact Customer Service **Support@parr otuncle.com** to order a complimentary Blade Balancing Kit
- If all deviations are less than 1/8 inch and the fan continues to wobble, please contact Customer Service **Support@parrotuncle .com** to order a complimentary Blade Balancing Kit

4. LIGHT IS NOT WORKING

Check Bulb to make sure it is installed correctly
Remove non-working bulb and replace with a bulb that is known to be a good working bulb
To reset the remote control: 1) Turn off power to fan using the wall switch or circuit breaker. 2) Remove batteries from remote. 3) Wait 10 seconds. 4) Replace batteries and turn power on

Parrot Uncle

CPS1268-A4

Installation & Operating Instructions for the
Parrotuncle Owner's Installation, Manual

WARNING: SHUT POWER OFF AT FUSE OR CIRCUIT BERAKER

AFTER INSTALLATION

WOBBLE

The fan blades have been adjusted in the factory to minimize any wobble

NOTE: CEILING FANS TEND TO MOVE DURING OPERATION DUE TO THE FACT THAT THEY ARE MOUNTED ON A RUBBER CROMMET. IF THE FAN WAS MOUNTED RIGIDLY TO THE CEILING, IT WOULD CAUSE EXCESS VIBRATION. MOVEMENT OF A FEW CENTIMENTERS IS QUITE ACCEPTABLE AND DOES NOT SUGGEST ANY PROBLEM
TO REDUCE THE FAN WOBBLE, PLEASE CHECK THAT ALL SCREWS WHICH SECURED THE MOUNTING BRACKET AND DOWNROD ARE SECURE.

BALANCING A WOBBLING CEILING FAN

For your convenience, a Balancing Kit is included, please follow this procedure when balancing the fan:

1. Check that all blade and blade arm screws are secure.

2. Most fan wobbling problems are caused when blade levels are unequal. Check this level by selecting a point on the ceiling above the tip of one of the blades. Measure this distance. Rotate the fan until the next blade is positioned for measurement. Repeat for each blade. The distance deviation should be equal within 1/8"(0.32cm).

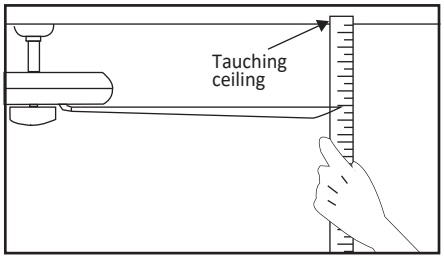

3. If the blade wobble is still noticeable, use the enclosed Blade Balancing Kit.

4. If the blade wobble is still noticeable, interchanging two adjacent (side by side) blades can redistribute the weight and possibly result in smoother operation.

WARNING: TO REDUCE THE RISK OF PERSONAL INJURY, DO NOT BEND THE BLADE ARM WHILE INSTALLING, BALANCING THE BLADES, OR CLEANING THE FAN. DO NOT INSERT FOREIGN OBJECTS BETWEEN ROTATING FAN BLADES.

NOISE
When it is quiet (especially at night) you may hear occasional small noises. This is normal. Please allowa 24-hour “breaking-in” period, most noises associated with a new fan disappear during the time.

CARE AND CLEANING
1. Periodic cleaning of your ceiling fan is the only maintenance required. Use a soft brush or lint free cloth to avoid scratching the paint finish. Please make sure to turn off electricity power before you clean your fan

2. Do not use water when cleaning your ceiling fan. It could damage the motor or the blades and create the possibility of an electrical shock.

3. Motor has permanently lubricated ball bearing. No need to oil

NOTE:
MAKE SURE THE POWER IS OFF AT THE ELECTRICAL PANEL BOX BEFORE YOU ATTEMPT ANY CLEANING OR REPAIRS.

Parrot Uncle

CPS1268-A4

Installation & Operating Instructions for the
Parrotuncle Owner's Installation, Manual

WARNING: SHUT POWER OFF AT FUSE OR CIRCUIT BERAKER

APP Control Connection

1. First search and download the free ParrotUncle Smart app from the App Store or Google Play or scan the QR Code as below.

2. Open the ParrotUncle Smart app to create your account. The account with "ParrotUncle Smart" can beregistered through E-mail or Mobile phone.

3. Connect the device to the ParrotUncle Smart app (WIFI&Bluetooth on):
   a. Press"+"button into the device list.
   b. Tap “Auto Scan” on the top.
   c. Wait for the device comes out and tap "Next".
   d. Press “+” button to add device.
   e. Connect to your home WIFI.
   f. Wait for connecting.

How to reset network settings in ceiling fan:
   a. Powered off the fan
   b. Powered on the fan, press and hold the off button on the remote within 30 seconds
   c. The flash of the light indicates that the reset network settings is successful
   d. Now you can use the app to re-connect the device

Need more help, please visit https://faq.parrotuncle.com or scan this QR code to watch the video


Parrot Uncle