Parrot Uncle

INSTALLATION INSTRUCTION
for ceiling fan



Motor is core parts of the fan and the most expensive in all the components. The fan is used currently divided into two major categories of AC motor and DC motor, the AC motor is absolute mainstream. Although the AC motor occupies absolute advantage, but not the best solution. The main problem is common AC motor has big power consumption, high noise, large calorific value. The DC motor is began to popular in recent years. Comparing with AC motor, Dc motor has obvious advantages in terms of noise and power consumption. So using DC motor has become the industry standard among the high-end fan. In common fans, for example, the typical peak power of AC fan is about 60-70W, but DC fan is 25-30W only. If you use low ventilation operation, it is only 3-5W of power consumption, very save electric power.

Parrot Uncle YOU CAN BE SURE OF are trademarks of Eileen Grays LLC.

SAFETY PRECAUTION

- **WARNING** —To make sure power is off before attempting installation.
- **WARNING** — Support Directly From Building Structure.
- **WARNING** —To reduce the risk of fire, electric shock, or injury to persons, unplug or disconnect the appliance from the power supply before the fan installation, cleaning, or servicing.
- **WARNING** —Suitable for use with solid-state speed controls.
- **WARNING** —Do not connect this fan to regulator or dimmer switch.
- **WARNING** —To Reduce The Risk Of Personal Injury, Do Not Bend The Blade Brackets When Installing The Brackets, Balancing The Blades, Or Cleaning The Fan. Do Not Insert Foreign Objects In Between Rotating Fan Blades.
- The installation is to be in accordance with the National Electrical Code, ANSI/NFPA 70-1999 and local codes. Consult a qualified electrician if in double.
- **WARNING** — To Reduce The Risk Of Electric Shock, This Fan Must Be Installed With A General-Use, Isolating Wall Control/Switch.
- All set screws must be checked, and retightened where necessary, before installation.
- After making the wire connections, the wires should be spread apart with the grounded conductor and the equipment-grounding conductor on one side of the outlet box and the ungrounded conductor on the other side of the outlet box.
- The splices after being made should be turned upward and pushed carefully up into the outlet box.
- Conductor of a fan identified as grounded conductor to be connected to a grounded conductor of power supply, conductor of fan identified as ungrounded conductor to be connected to an ungrounded conductor of power supply, conductor of fan identified for equipment grounding to be connected to an equipment-grounding conductor.
- **CAUTION**—To Reduce The Risk Of Electric Shock, Disconnect The Electrical Supply Circuit To The Fan Before Installing Light Kit.

Fan Model No.: **BBA802901CA**

Weight of Fan with Light Kit: **13.3 KGS.**

PARTS & ACCESSORIES

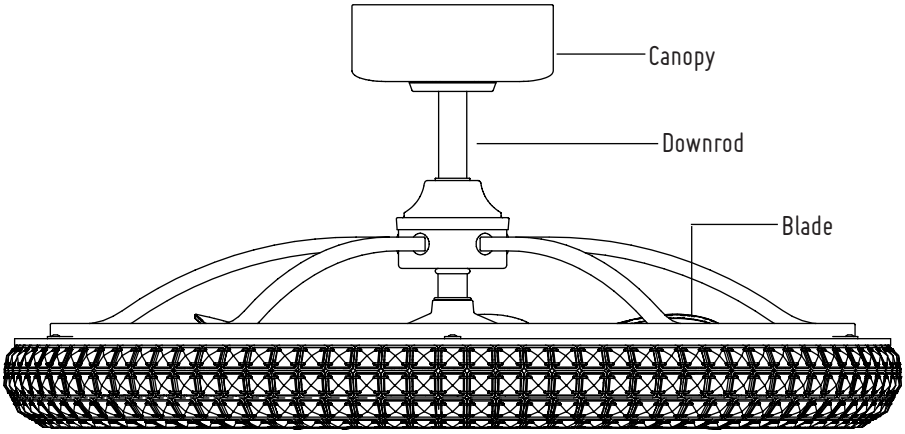

Transmitter Kit

Transmitter

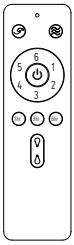

Transmitter Holder

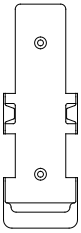

Battery



CR2032/3V

Wall Screw x 2



Assembly Kit



Plastic Anchor x 4

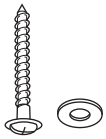

Self Tapping Screw &Washer x 4

INSTALLATION INSTRUCTION

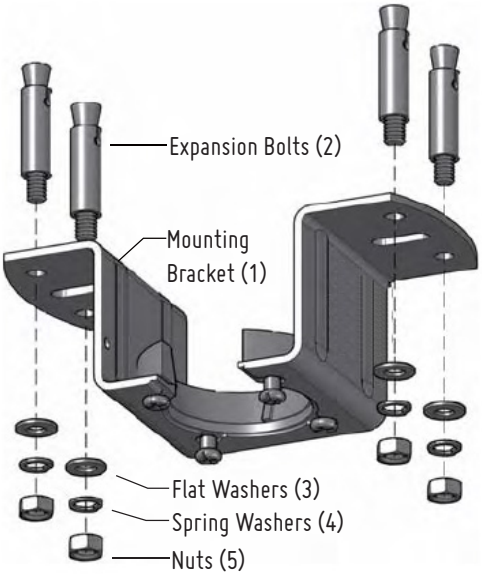

STEP 1A – CONCRETE CEILING

SWITCH OFF THE ELECTRICAL MAINS AT THE CIRCUIT BREAKER FUSE BOX.

1) Use the Mounting Bracket (1) as a guide, mark the spots where the 4 Expansion Bolts (2) will be drilled.

2) Remove the Mounting Bracket (1), drill 4 holes and insert 4 Expansion Bolts (2) into the concrete ceiling, install the mounting bracket and secure with Flat Washers (3), Spring Washers (4) and Nuts (5).

IMPORTANT : SCREWS & NUTS MUST BE TIGHTENED TILL SNUG

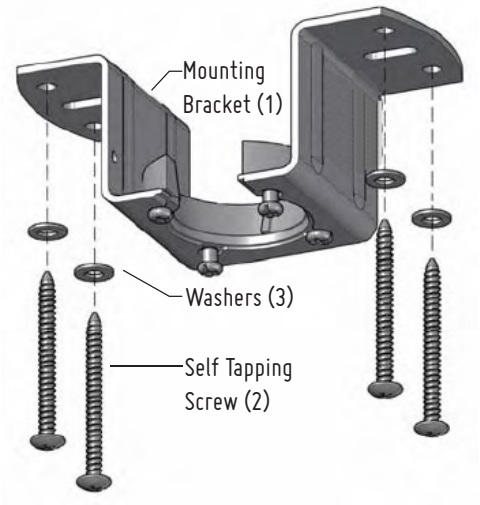

STEP 1B – WOODEN CEILING

SWITCH OFF THE ELECTRICAL MAINS AT THE CIRCUIT BREAKER FUSE BOX.

1) Use the Mounting Bracket (1) as a guide, mark the spots where the 4 Self Tapping Screws (2) will be drilled.

2) Remove the Mounting Bracket (1), drill 4 holes for 3MM diameter, install the mounting bracket onto wooden ceiling with the 4 Self Tapping Screws (2) & Washers (3).

IMPORTANT : SCREWS MUST BE TIGHTENED TILL SNUG

INSTALLATION INSTRUCTION

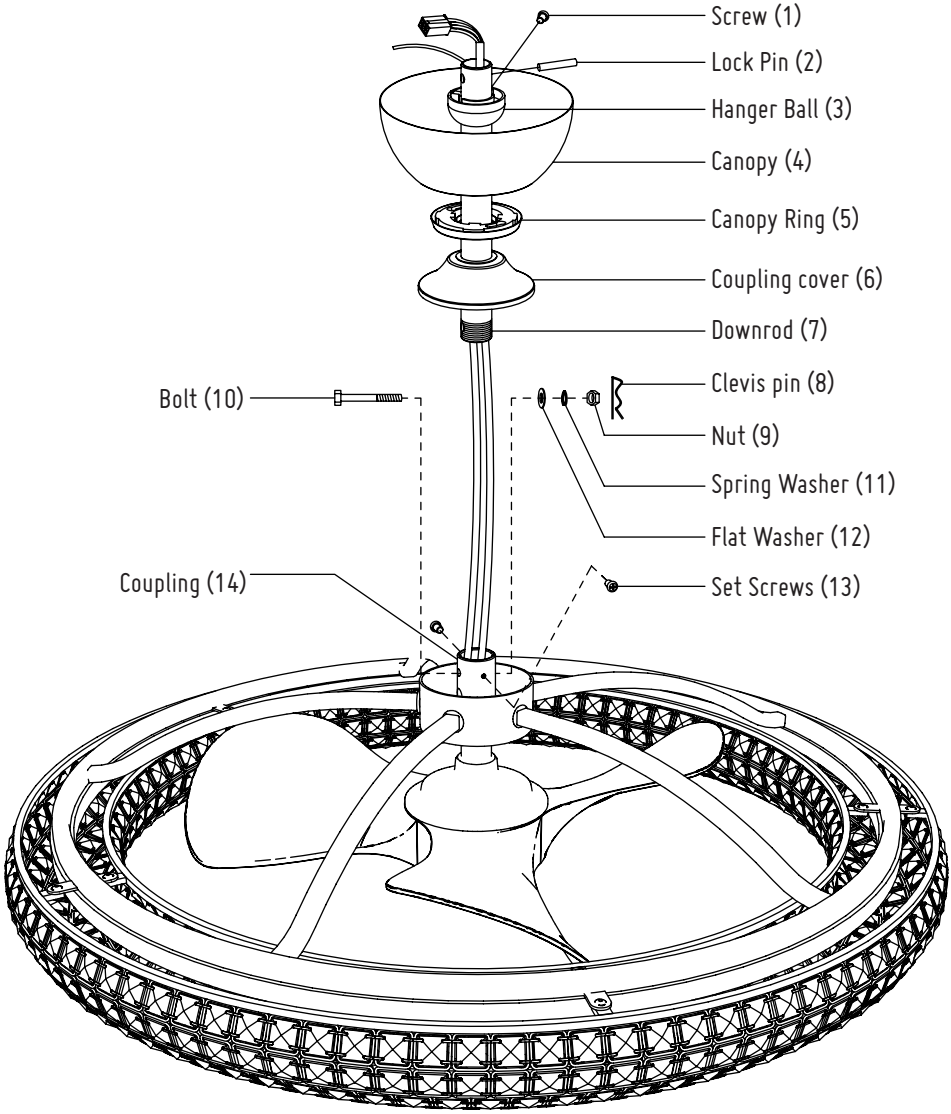

INSTALLATION INSTRUCTION

STEP 2

1) Remove the Clevis Pin (8), Nut (9), Spring Washers (11), Flat Washers(12) & Bolt (10) on Coupling (14).

2) Loosen the Screw (1) from Hanger Ball (3), remove the Hanger Ball (3) and Lock Pin (2).

3) Route the wires and safety wire from the motor through the Downrod (7).

4) Install the Downrod (7) to Coupling (14) and secure with Bolt (10), Flat Washer (12), Spring Washer (11), Nut (9) & Clevis pin (8).

5) Tighten the 2 Set Screws (13) on the Coupling (14) to serve as a clamping force on the Downrod (7) to prevent fan shaking during operation.

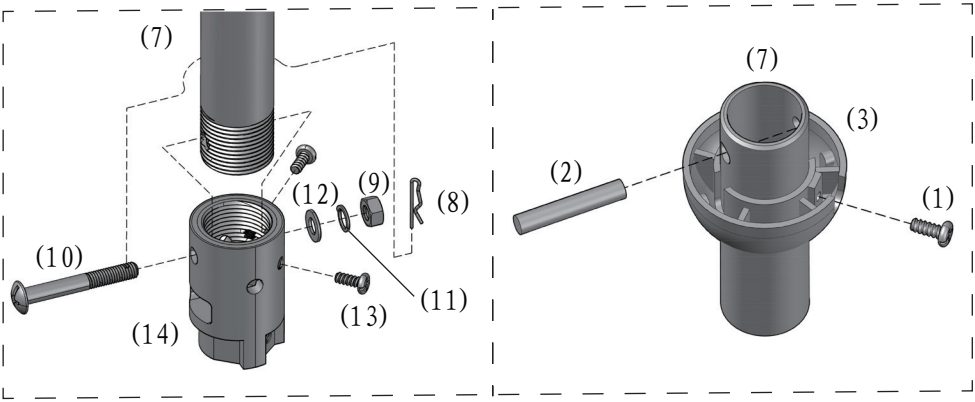

6) Route the Coupling cover (6), Canopy Ring (5), Canopy (4) and Hanger Ball (3) through the Downrod (7) in turn, and then install the Lock pin (2) through the hole on the Downrod (7). Slip the hanger ball (3) upward to lock Pin (2), and fix it by Screw (1), then slip down the Coupling Cover (6) in correct position.

7) Remove the stopper(x3) on the top of fan motor.

INSTALLATION INSTRUCTION

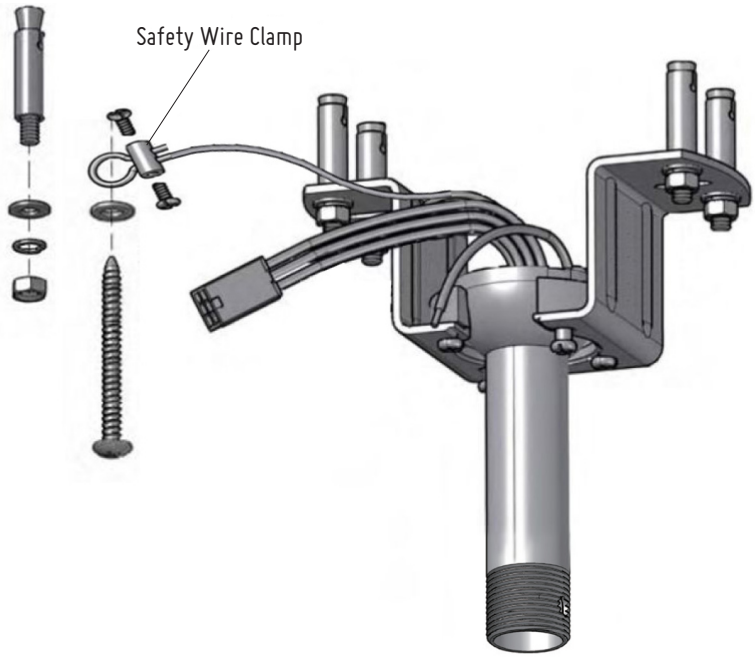

STEP 3

1) Raise the fan and place the hanger ball onto mounting bracket.
2) Rotate the fan until the notch on hanger ball snapped into the slot on mounting bracket and sits firmly.

NOTE : THE DOWNROD AND HANGER BALL SHOULD NOT ROTATE IF THIS STEP IS DONECORRECTLY.

3) Tighten the safety wire clamp.
4) Place ring of safety wire through the expansion bolt or self tapping screw and fix it to the building structure.
5) Connect the wire connector plugs correctly. The wire connector plugs design with fool proof device, please don't force to plug. Otherwise it may affect the normal use of the light fan or burn the fan motor.

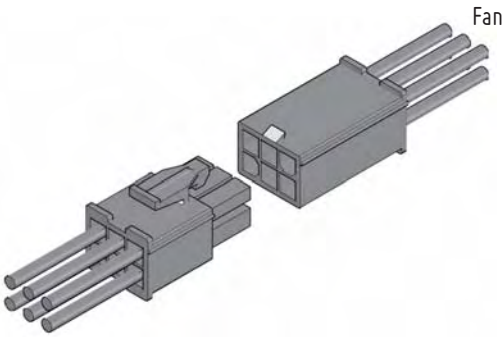

INSTALLATION INSTRUCTION

STEP 4

SWITCH OFF THE ELECTRICAL MAINS AT THE CIRCUIT BREAKER FUSE BOX.

1) Connect wires from controller to power supply with wire connectors.

2) Insert the controller into the space of the mounting bracket, and tidy up the wiring.

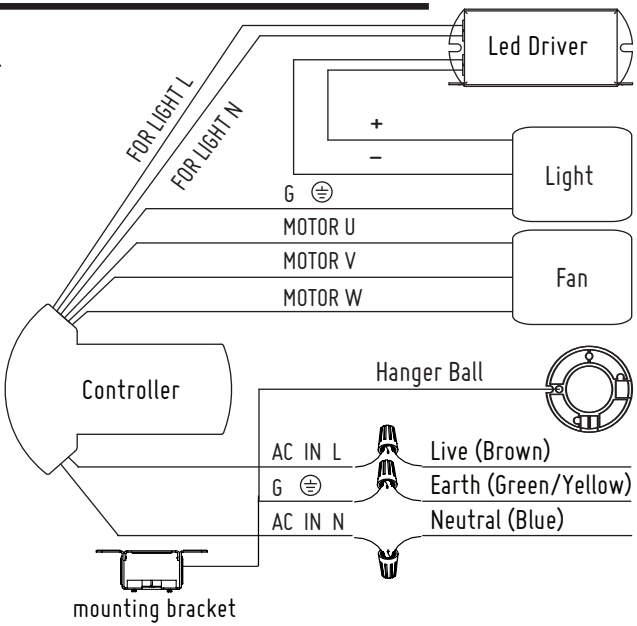

STEP 5

1) Carefully push the canopy to the bottom of the mounting bracket, make two sliding holes aligned to the two prominent screws on the mounting bracket, and then turn clockwise until tight.

2) Push the canopy ring to the bottom of the canopy, slide the inner holes aligned to the two prominent screws on the mounting bracket again, and turn the canopy ring clockwise until tight.

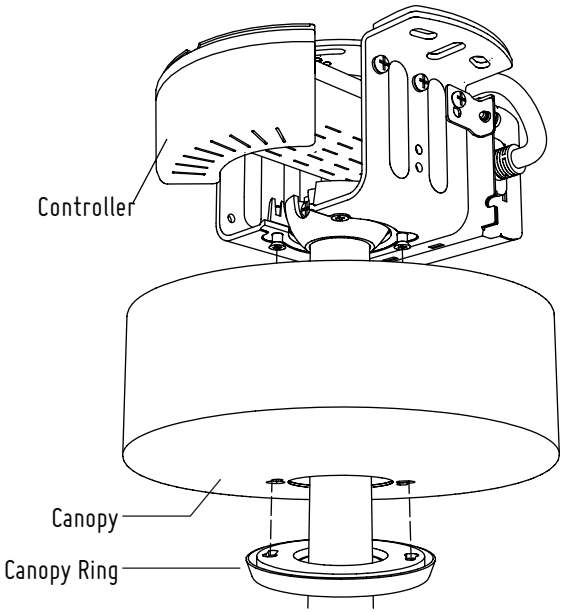

TRANSMITTER FUNCTION

TRANSMITTER SETTING

This DC motor is equipped with self-learning frequency function transmitter. Read all the steps BEFORE proceeding. Each step must be followed exactly in order to program the transmitter.

To use factory pre-programmed setting — Skip the below programming steps. Insert battery into transmitter, turn on the power supply to fan and it is ready to use.

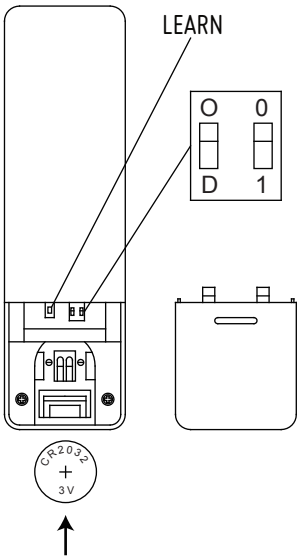

FIRST ONE USE INSTRUCTION

1) Dial up to position"O", it is on/off only for the lighting, and it is the brightest of the light.

2) Dial down to position"D", the brightness of the light can be control low or high.

SECOND ONE USE INSTRUCTION

1) If you have more than 1 unit of this fan model in close proximity, it is equipped self-learning, please don't press any key when self-learning.

2) To set the second one down to the position of "1" (set to "0" position on one product when used directly).

3) Turn on the power of the light fan.

4) Within 30 sec after the "Beep", press and hold the LEARN button for 3 sec. Once the receiver has detected and learned the frequency, the receiver will "Beep" twice, meanwhile the light will bright out twice. Programming/self-learning process is completed and fan is ready to use.

ATTENTION

1) If the fan is not responding to the transmitter. Turn off the power supply to fan for 30 sec and then restore power & reset the transmitter.

2) If long time not to use the transmitter, please take the battery out.

TRANSMITTER FUNCTION

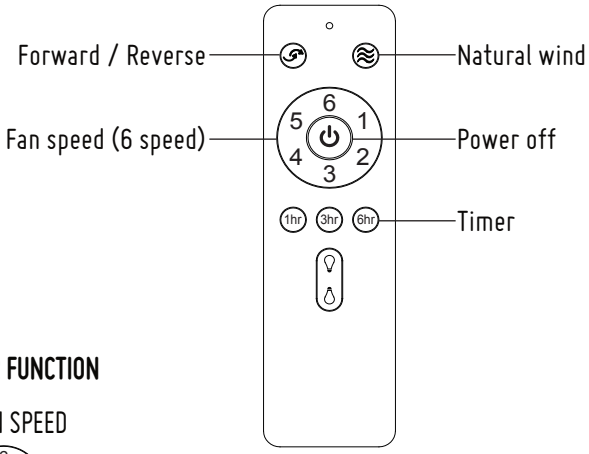

TRANSMITTER FUNCTION

FAN SPEED

Fan speed 1 — 6 control (1-low speed, 6-high speed)

Turns off the fan

Timing the fan

1hr Auto off after 1 hr

3hr Auto off after 3 hr

6hr Auto off after 6 hr

Cancel timing setup

Forward or reverse operation: change fan rotating direction.

Natural Wind: Press the button to change fan rotating direction. Fan speed changes within its range creating gentle natural wind effect.

Lamp on-off control

TRANSMITTER FUNCTION

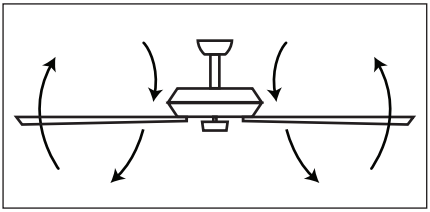

Forward
Fan rotates anti-clockwise creating a downward airflow delivering a cooling effect.
Suitable for hot weather condition or air-conditioned condition.

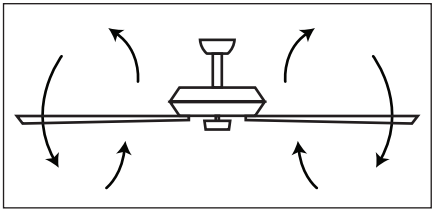

Reverse
Fan rotates clockwise creating an upward airflow moving warm air off the ceiling areas. This function works best at lower fan speed.
Suitable for cold weather or air-conditioned condition.

TRANSMITTER HOLDER

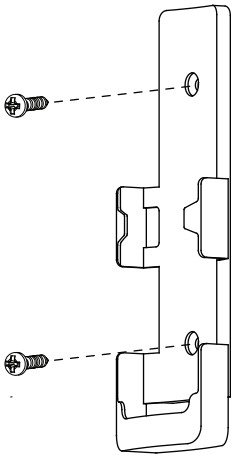

Holder

Installing Transmitter Holder

Install the transmitter holder to the wall or any flat surface with the two mounting screw provided.

TECHNICAL SPECIFICATIONS

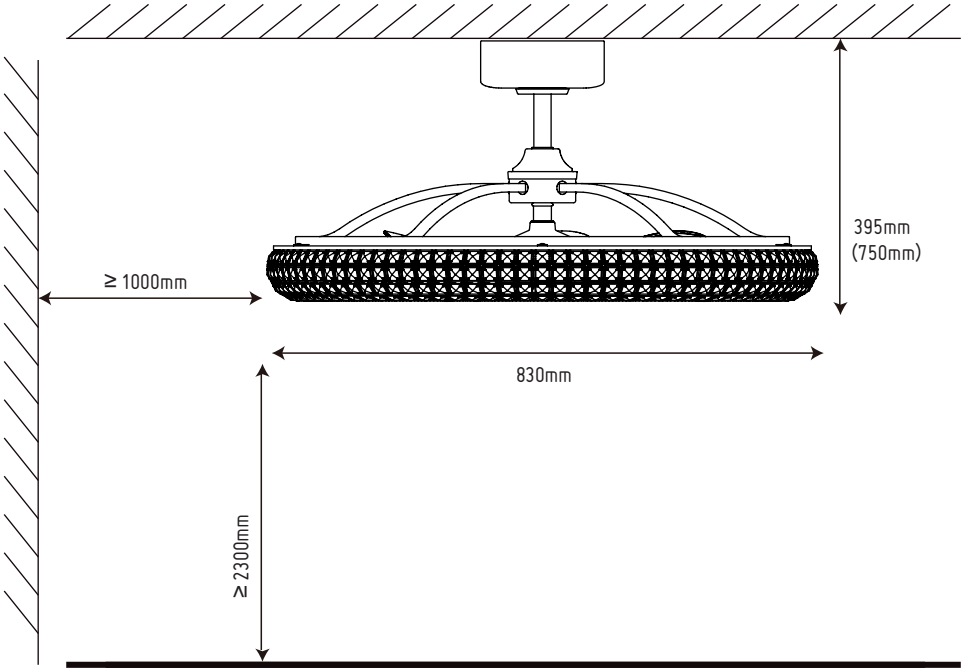

Model	No. of blades	Fan width	Light bulb	Voltage
BBA802901CA	3	830mm	40W LED	110-120V~ 60Hz

Speed	Amps	Wattage	RPM	CFM	Nett weight	Gross weight
1	0.040	1.4	88	600	13.3 kg	18.8 kg
2	0.051	2.4	135	1000		
3	0.075	4.5	185	1350		
4	0.119	8.2	235	1750		
5	0.190	14.1	285	2150		
6	0.327	27.3	330	2600		

Specifications & measurements shown are subject to ±5% variations.

MAINTENANCE

Due to the fan's natural movement, connections may get loose after a period of usage. To ensure a proper and safety usage, inspect the suspension system and tighten all connections every 6 months.

Cleaning

Cleaning your fan periodically will prolong its useful life. Basic cleaning procedures are as follows:

1. Please shut off the power before you clean the light fan and replace the bulbs.

2. The bulbs and nearby parts will be still hot after the power is shut off. To avoid burn, please clean them after they are cooled down.

3. Don't use sandpaper, wire brush and other sharp tools to clean the light fan.

4. Don't clean the light fan by using detergents, acid or alkaline solvents.

5. Use only soft or lint-free cloth to clean the light fan.

6. Please dry the light fan by cold-blast air after cleaning, in order to prevent dangerous leakage caused by water infiltrated into electriferous parts of the light fan or prevent rust of wet metal parts.

7. There is no need to oil the fan.

CAUTION

READ INSTRUCTIONS CAREFULLY FOR SAFE INSTALLATION AND FAN OPERATION. IF UNSURE CONSULT A QUALIFIED ELECTRICIAN

THANK YOU FOR YOUR PURCHASE

Thank you for purchasing this quality product. To ensure correct function and safety, please read and save all instructions before using the product

LIGHT FAN THE BEST PARTNER OF AIR CONDITIONER & AIR PURIFIER

A lot of people think the fan is only used in the summer, actually fan has a great purpose is to speed up the indoor air circulation. For example, when you open the air conditioner in summer, if the installation location of the air conditioner is not proper, or the air conditioner itself has small power, it is easy to cause the problems of uneven distribution of temperature in the room. Then the fan can accelerate the flow of indoor hot and cold air, to make indoor temperature distribution more uniform & more comfortable feeling. In a heated room in winter is also the same reason. Because the air conditioner is high energy consumption product, refrigeration at room temperature 1℃ higher setting, heating time at room temperature 2℃ lower setting, that can save more than 10%. If use of fan at the same time, when we set the air conditioner temperature at 26℃-28℃ in summer and 16℃-18℃ in winter, we can also feel cool and warm. Now many families have air purifier, if used with an air circulation effect fan, can also promote the efficiency of air purifier, and make indoor air quality more uniform.

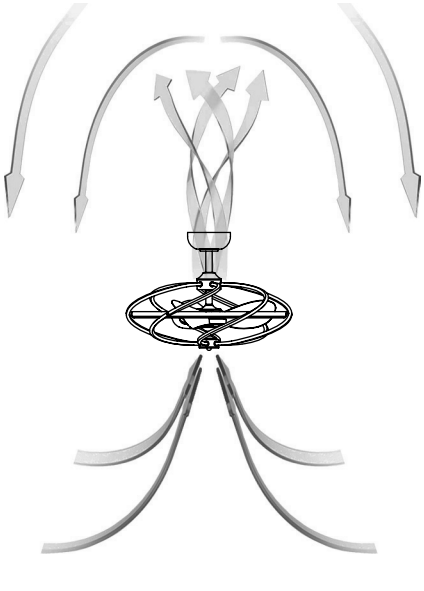

Reverse

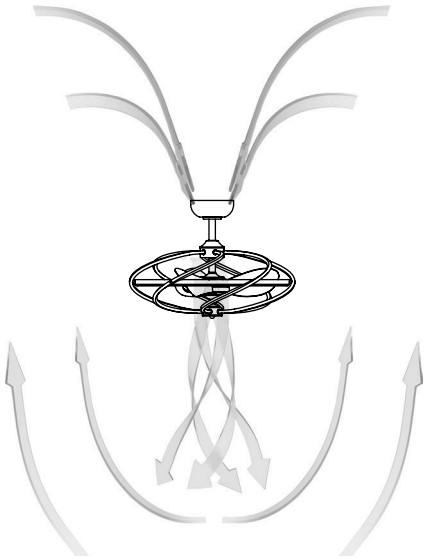

Forward

Used under license by Eileen Grays LLC. All rights reserved. Made in China


Parrot Uncle