Form No. 3461-598 Rev A

TORO®

Count on it.

Operator's Manual

SnowMaster® e24 60V Snowthrower

Model No. 39915—Serial No. 400000000 and Up
Model No. 39915T—Serial No. 400000000 and Up

Register at www.Toro.com.
Original Instructions (EN)

3461-598

⚠ WARNING

CALIFORNIA
Proposition 65 Warning

The power cord on this product contains lead, a chemical known to the State of California to cause birth defects or other reproductive harm. Wash hands after handling.

Use of this product may cause exposure to chemicals known to the State of California to cause cancer, birth defects, or other reproductive harm.

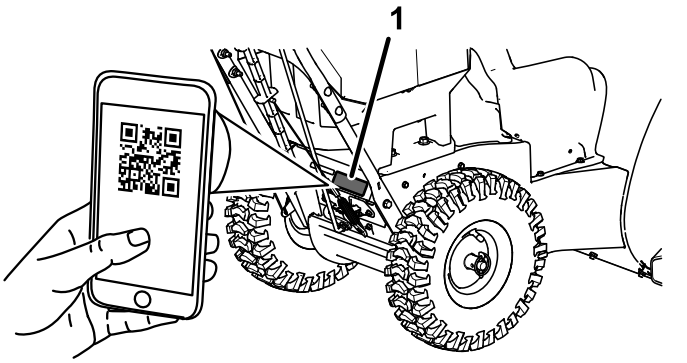

g397375

Figure 1

1. Model and serial number location

Model No. _____

Serial No. _____

Introduction

This machine is intended to be used by residential homeowners. It is designed primarily for removing snow from paved surfaces, such as driveways and sidewalks, and other surfaces for traffic on residential or commercial properties. It is not designed for removing materials other than snow, nor is it designed for clearing gravel surfaces. It is designed to use Toro 60V lithium-ion battery packs. These battery packs are designed to be charged only by Toro 60V lithium-ion battery chargers. Using this product for purposes other than its intended use could prove dangerous to you and bystanders.

Model 39915T does not include a battery or a charger.

Read this information carefully to learn how to operate and maintain your product properly and to avoid injury and product damage. You are responsible for operating the product properly and safely.

Visit www.Toro.com for product safety and operation training materials, accessory information, help finding a dealer, or to register your product.

Whenever you need service, genuine Toro parts, or additional information, contact an Authorized Service Dealer or Toro Customer Service and have the model and serial numbers of your product ready. Figure 1 identifies the location of the model and serial numbers on the product. Write the numbers in the space provided.

Important: **With your mobile device, you can scan the QR code on the serial number decal (if equipped) to access warranty, parts, and other product information.**

Safety-Alert Symbol

The safety-alert symbol (Figure 2) shown in this manual and on the machine identifies important safety messages that you must follow to prevent accidents.



g000502

Figure 2
Safety-alert symbol

The safety-alert symbol appears above information that alerts you to unsafe actions or situations and is followed by the word **DANGER**, **WARNING**, or **CAUTION**.

DANGER indicates an imminently hazardous situation which, if not avoided, **will** result in death or serious injury.

WARNING indicates a potentially hazardous situation which, if not avoided, **could** result in death or serious injury.

CAUTION indicates a potentially hazardous situation which, if not avoided, **may** result in minor or moderate injury.

This manual uses two other words to highlight information. **Important** calls attention to special mechanical information and **Note** emphasizes general information worthy of special attention.

© 2023—The Toro® Company
8111 Lyndale Avenue South
Bloomington, MN 55420

Contact us at www.Toro.com.
Printed in Mexico
All Rights Reserved

Contents

Safety-Alert Symbol 2
Safety 3
..... 3
Safety and Instructional Decals 6
Setup 9
1 Mounting the Battery Charger (Optional) 9
2 Unfolding the Handle 9
3 Installing the Discharge Chute 10
4 Installing the Chute-Control Rod 10
5 Checking the Tire Pressure 11
6 Checking the Skids 12
7 Adjusting the Auger Cable 12
Product Overview 13
Specifications 14
Attachments/Accessories 14
Before Operation 14
Installing the Battery Pack 14
Turning On the Headlight 15
During Operation 15
Starting the Machine 15
Activating ECO Mode 15
Charging the Battery Pack 16
Engaging the Auger 17
Disengaging the Auger 17
Self-Propelling the Machine 17
Shutting Off the Machine 17
Operating the Quick Stick 18
Clearing a Clogged Discharge Chute 18
Operating Tips 18
After Operation 18
Shutting Off the Machine 18
Removing the Battery Pack from the Machine 19
Preventing Freeze-up after Use 19
Maintenance 20
Recommended Maintenance Schedule(s) 20
Preparing for Maintenance 20
Checking and Adjusting the Skids 20
Adjusting the Auger Cable 21
Adjusting the Transmission Cable 21
Replacing the Drive Belts 21
Storage 22
Storing the Machine 22
Troubleshooting 23

Safety

IMPORTANT SAFETY INSTRUCTIONS

⚠ WARNING

When using an electric machine, always read and follow basic safety warnings and instructions to reduce the risk of fire, electric shock, or injury, including the following:

Read All Instructions

I. Training

1. The operator of the machine is responsible for any accidents or hazards occurring to others or their property.
2. Read and understand the contents of this *Operator's Manual* before you start the machine. Ensure that everyone using this machine knows how to use it, knows how to shut it off quickly, and understands the warnings.
3. Do not allow children to use or play with the machine, battery pack, or the battery charger; local regulations may restrict the age of the operator.
4. Do not allow children or untrained people to operate or service this device. Allow only people who are responsible, trained, familiar with the instructions, and physically capable to operate or service the device.
5. Before using the machine, battery pack, and battery charger, read all the instructions and cautionary markings on these products.
6. Become familiar with the controls and proper use of the machine, battery pack, and battery charger.

II. Preparation

1. Keep bystanders and children out of the operating area.
2. Never allow children to operate the machine.
3. Do not operate the machine without all guards and other safety devices in place and functioning properly on the machine.
4. Inspect the area where you will use the machine and remove all objects that could interfere with the operation of the machine or that the machine could throw.
5. Use only the battery pack specified by Toro. Using other accessories and attachments may increase the risk of injury and fire.
6. Plugging the battery charger into an outlet that is not 120 V can cause a fire or electric shock. Do not plug the battery charger into an outlet other than 120 V.
7. Do not use a damaged or modified battery pack or battery charger, which may exhibit unpredictable behavior that results in fire, explosion, or risk of injury.
8. If the supply cord to the battery charger is damaged, contact an Authorized Service Dealer to replace it.
9. Charge the battery pack with only the battery charger specified by Toro. A charger suitable for 1 type of battery pack may create a risk of fire when used with another battery pack.
10. Charge the battery pack in a well-ventilated area only.
11. Follow all charging instructions and do not charge the battery pack outside of the temperature range specified in the instructions. Otherwise, you may damage the battery pack and increase the risk of fire.
12. Dress properly—Wear appropriate clothing, including eye protection; long pants; substantial, slip-resistant rubber boots; and hearing protection. Tie back long hair and do not wear loose clothing or loose jewelry that can get caught in moving parts.

III. Operation

1. Contact with the moving rotor will cause serious injury. Keep your hands and feet away from all moving parts of the machine. Keep clear of any discharge opening.
2. Stay behind the handles and away from the discharge opening while operating the machine.
3. Using this machine for purposes other than its intended use could prove dangerous to you and bystanders.
4. Prevent unintentional starting—Ensure that the electric-start key is removed from the key switch before connecting the battery pack and handling the machine.
5. Use your full attention while operating the machine. Do not engage in any activity that causes distractions; otherwise, injury or property damage may occur.
6. Disengage all clutches and shift into neutral before starting the machine.
7. Shut off the machine, remove the electric-start key, remove the battery pack from the machine, and wait for all movement to stop before adjusting, servicing, cleaning, or storing the machine.
8. Remove the battery pack and electric-start key from the machine whenever you leave it unattended or before changing accessories.
9. Do not force the machine—Allow the machine to do the job better and safer at the rate for which it was designed.
10. Stay alert—Watch what you are doing and use common sense when operating the machine. Do not use the machine while ill, tired, or under the influence of alcohol or drugs.
11. Operate the machine only in good visibility and appropriate weather conditions.
12. Use extreme caution when reversing or pulling the machine toward you.
13. Keep proper footing and balance at all times, especially on slopes. Use extreme caution when changing directions on slopes. Do not operate the machine on exceedingly steep slopes. Walk, never run with the machine.
14. When not actively clearing snow, disengage power to the auger.
15. Do not direct the discharge material toward anyone. Avoid discharging material against a wall or obstruction; material may ricochet toward you. Shut off the machine when crossing gravel surfaces.
16. Exercise extreme caution when operating the machine on walks or roads. Stay alert for hidden hazards or traffic.
17. If the machine strikes an object or starts to vibrate, immediately shut off the machine, remove the key, remove the battery pack, and wait for all movement to stop before examining the machine for damage. Make all necessary repairs before resuming operation.
18. Shut off the machine whenever you leave the operating position for any reason.

19. Shut off the machine and remove the key before unclogging the machine and always use a stick or a cleanout tool to remove the clog.
20. Shut off the machine, remove the electric-start key, and remove the battery pack(s) before loading the machine for hauling.
21. Never operate the machine at high transport speeds on slippery surfaces.
22. Under abusive conditions, the battery pack may eject liquid; avoid contact. If you accidently come into contact with the liquid, flush with water. If the liquid contacts your eyes, seek medical help. Liquid ejected from the battery pack may cause irritation or burns.
23. Do not expose a battery pack or tool to fire or excessive temperature. Exposure to fire or temperature above 130°C (265°F) may cause explosion.
24. CAUTION—A mistreated battery pack may present a risk of fire, explosion, or chemical burn.
    - Do not disassemble the battery pack.
    - Replace the battery pack with a genuine Toro battery pack only; using another type of battery pack may cause a fire or risk of injury.
    - Keep battery packs out of the reach of children and in the original packaging until you are ready to use them.

IV. Maintenance and Storage

1. Shut off the machine, wait for all moving parts to stop, remove the electric-start key, and remove the battery pack(s) from the machine before adjusting, servicing, cleaning, or storing the machine.
2. Do not attempt to repair the machine except as indicated in the instructions. Have an Authorized Service Dealer perform service on the machine using identical replacement parts.
3. Wear gloves and eye protection when servicing the machine.
4. When servicing the rotor, be aware that the rotor can still move even though the power source is off.
5. For best performance, use only genuine Toro replacement parts and accessories. Other replacement parts and accessories could be dangerous, and such use could void the product warranty.
6. Maintain the machine—Keep handles dry, clean, and free from oil and grease. Keep guards in place and in working order. Use identical replacement parts only.
7. Check all fasteners at frequent intervals for proper tightness to ensure that the machine is in safe working condition.
8. Check the machine for damaged parts. Check for misaligned and binding moving parts, broken parts, mounting, and any other condition that may affect its operation. Unless indicated in the instructions, have an Authorized Service Dealer repair or replace a damaged guard or part.
9. When the battery pack is not in use, keep it away from metal objects such as paper clips, coins, keys, nails, and screws that can make a connection from 1 terminal to another. Shorting the battery terminals may cause burns or a fire.
10. When you are not using the machine, store it indoors in a dry, secure place out of the reach of children.
11. When storing the machine for more than 30 days, refer to Storage (page 22) for important information.

SAVE THESE INSTRUCTIONS

Safety and Instructional Decals

Safety decals and instructions are easily visible to the operator and are located near any area of potential danger. Replace any decal that is damaged or missing.

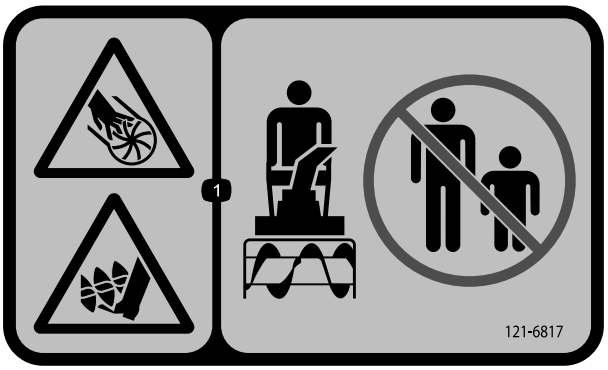

decal121-6817

121-6817

1. Cutting/dismemberment hazard of hand or foot, impeller and auger—keep bystanders away.

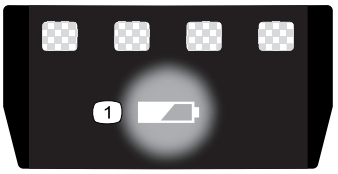

decal137-9461

137-9461

1. Battery charge status



decal137-9463

137-9463

1. The battery pack is charging.
2. The battery pack is fully charged.
3. The battery pack is over or under the appropriate temperature range.
4. Battery pack charging fault

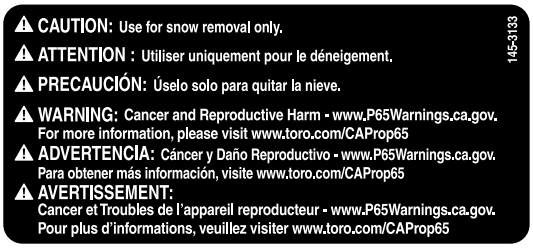

decal145-3133

145-3133



decal145-1479

145-1479

1. Read the *Operator's Manual*.
2. Call2Recycle® battery recycling program
3. Keep away from open fire or flames.
4. Do not expose to rain.



decal145-8260

145-8260

1. Read the *Operator's Manual*.
2. Keep away from open fire or flames.
3. Do not expose to rain.

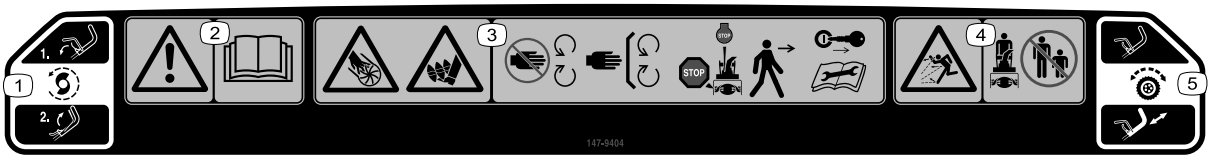

decal147-9404

147-9404

1. Auger drive—release the lever to disengage; squeeze the lever to engage.
2. Warning—read the *Operator's Manual*.
3. Cutting/dismemberment hazard of hands or feet, impeller and auger—keep away from moving parts; keep all guards and shields in place; shut off the engine and remove the key before leaving the machine or performing maintenance.
4. Thrown object hazard—keep bystanders away.
5. Self-propel drive—push down on the handle to engage the self-propel drive.



decal147-9420

147-9420

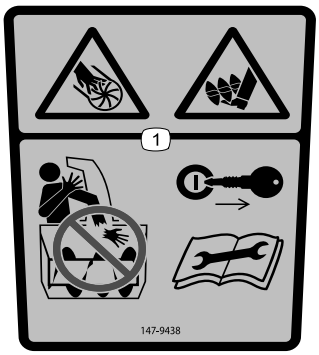

decal147-9438

147-9438

1. Cutting/dismemberment hazard of hands or feet, impeller and auger—do not place your hand in the chute; remove the key before performing maintenance.

Setup

Important: **The battery pack is not fully charged when you purchase it. Before using the machine for the first time, refer to Charging the Battery Pack (page 16).**

1

Mounting the Battery Charger (Optional)

Parts needed for this procedure:

2	Mounting hardware (not included)

Procedure

If desired, mount the battery charger securely on a wall using the wall-mount key holes on the back of the charger.

Mount it indoors (such as a garage or other dry place), near a power outlet, and out of the reach of children.

Refer to Figure 3 for assistance in mounting the charger.

Slide the charger over the appropriately positioned hardware to secure the charger in place (hardware not included).

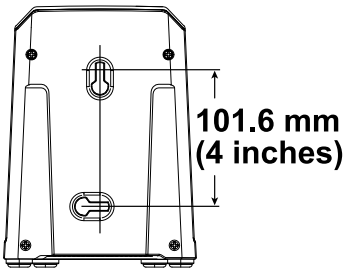

g290534

Figure 3

2

Unfolding the Handle

No Parts Required

Procedure

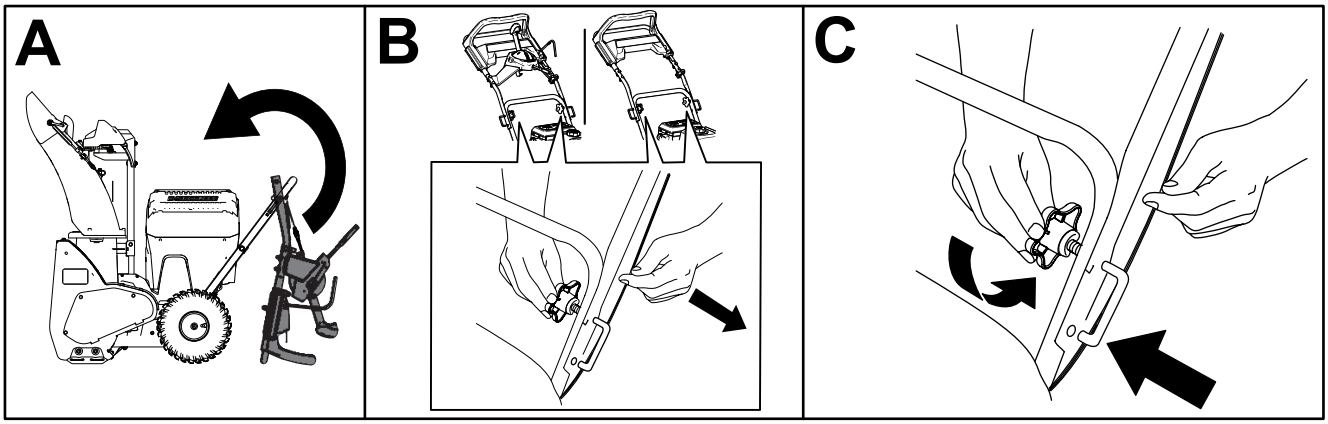

g431137

3

Installing the Discharge Chute

No Parts Required

Procedure

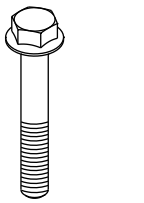

1x



1x

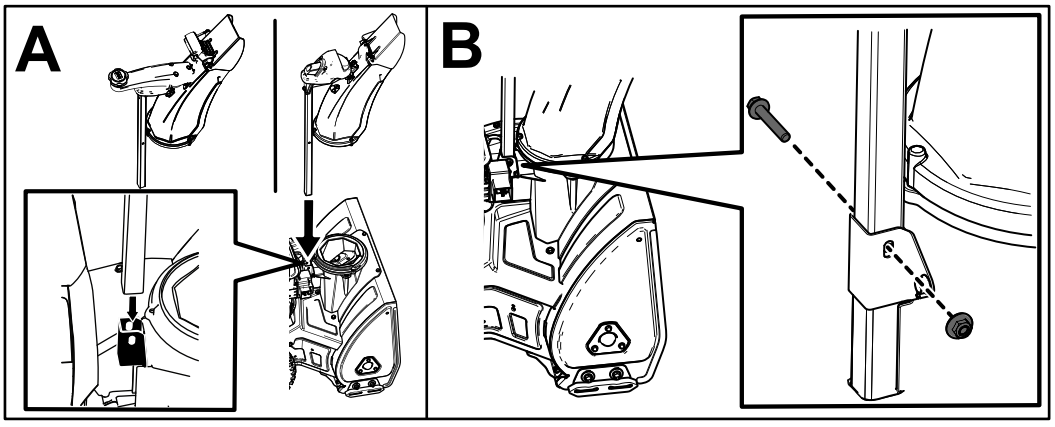

g431165

4

Installing the Chute-Control Rod

No Parts Required

Procedure

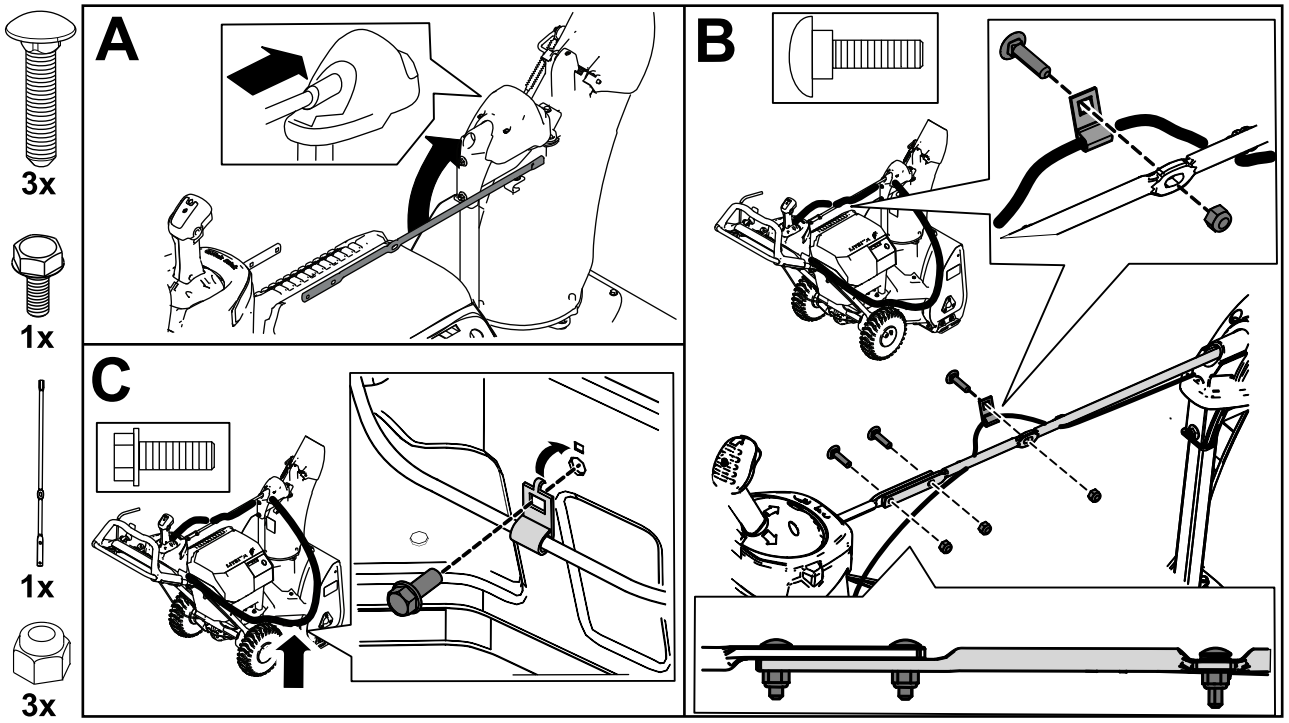

g431182

5

Checking the Tire Pressure

No Parts Required

Procedure

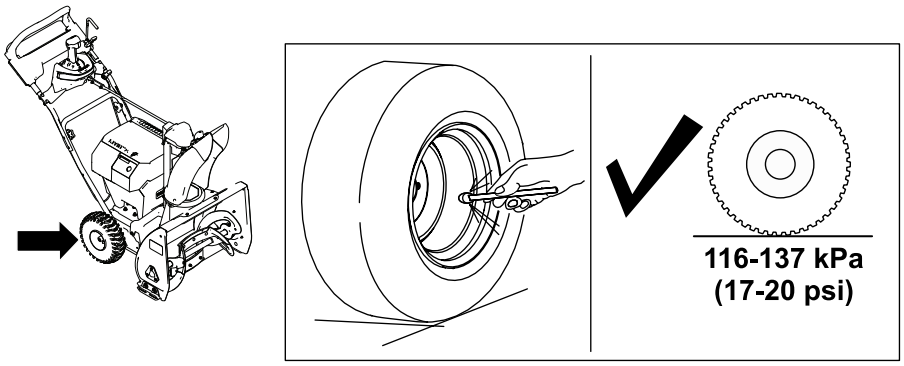

g431445

Figure 7

6

Checking the Skids

No Parts Required

Procedure

Refer to Checking and Adjusting the Skids (page 20).

7

Adjusting the Auger Cable

No Parts Required

Procedure

Check and adjust the auger cable before first use;
refer to Adjusting the Auger Cable (page 21).

Product Overview

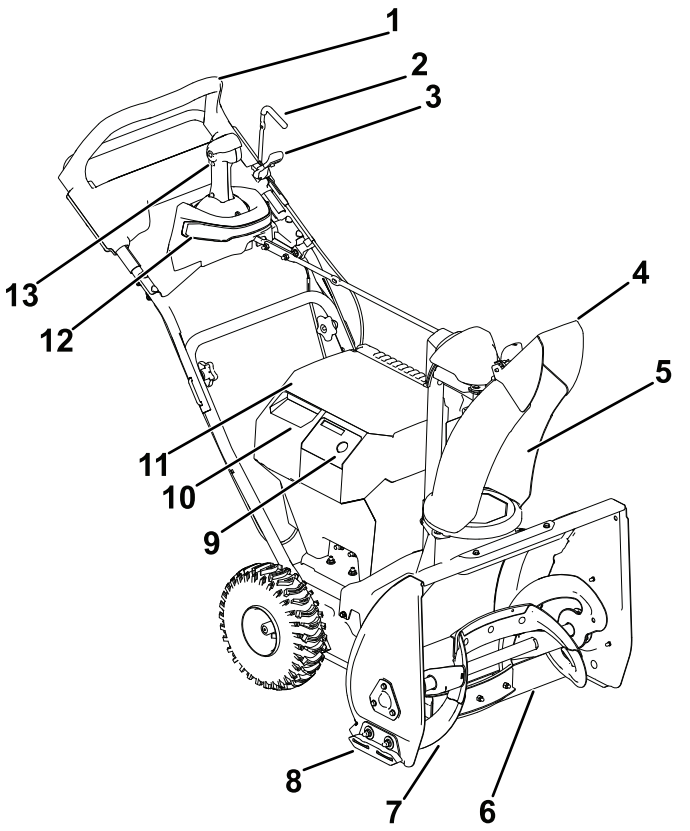

g430951

Figure 8

1. Handle
2. Auger lever
3. Auger-lever lock
4. Chute deflector
5. Discharge chute
6. Scraper
7. Auger
8. Skid
9. Electric-start key
10. Secondary battery-compartment lid
11. Main battery-compartment lid
12. Light
13. Quick Stick® discharge-chute control

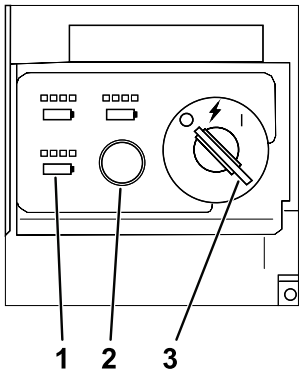

g347780

Figure 9

1. Battery charge lights
2. ECO button
3. Key switch in OFF position

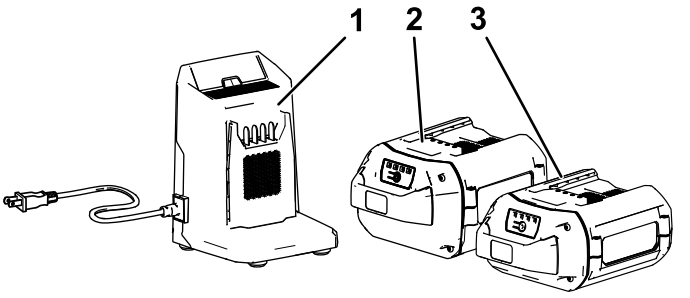

g360884

Figure 10

1. Battery charger Model 88602 (included with Model 39915)
2. Battery packs Model 88650 and 66810 (included with Model 39915)
3. Battery pack Model 88625 (not included)

Specifications

Model	Weight	Length	Width	Height
39915	54 kg (119 lb)	132 cm (52 inches)	63.5 cm (25 inches)	109 cm (43 inches)

Battery Pack

Model	88650	66810
Battery pack capacity	5 Ah	10 Ah
	270 Wh	540 Wh
Battery manufacturer rating = 60V maximum and 54V nominal. Actual voltage varies with load.		

Battery Charger

Model	88602
Type	60V MAX Lithium-Ion Battery Charger
Input	120V AC 50/60Hz Max 2.0A
Output	60V MAX DC 2.0A

Appropriate Temperature Ranges

Charge/store the battery pack at	5°C (41°F) to 40°C (104°F)*
Use the battery pack at	-30°C (-22°F) to 49°C (120°F)*
Use the machine at	-30°C (-22°F) to 49°C (120°F)*

*Charging time will increase if you do not charge the battery within this range.

Store the machine, battery pack, and battery charger in an enclosed clean, dry area.

Attachments/Accessories

A selection of Toro approved attachments and accessories is available for use with the machine to enhance and expand its capabilities. Contact your Authorized Service Dealer or authorized Toro distributor or go to www.Toro.com for a list of all approved attachments and accessories.

To ensure optimum performance and continued safety certification of the machine, use only genuine Toro replacement parts and accessories. Replacement parts and accessories made by other manufacturers could be dangerous.

Operation

Before Operation

Installing the Battery Pack

1. Ensure that the vents on the battery packs are clear of any dust and debris.
2. Lift up the battery-compartment lid.
3. Line up the cavity in the battery pack with the tongue on the machine and slide the battery pack into the compartment until it locks into place (Figure 11).
4. Close the battery-compartment lid.
5. Repeat for the other 2 battery cavities (if needed).

Note: The combined amp hours of all the installed batteries must add up to 6.0 or greater, otherwise the machine can not start.

Note: If the battery-compartment lid does not close completely, the battery is not fully installed.

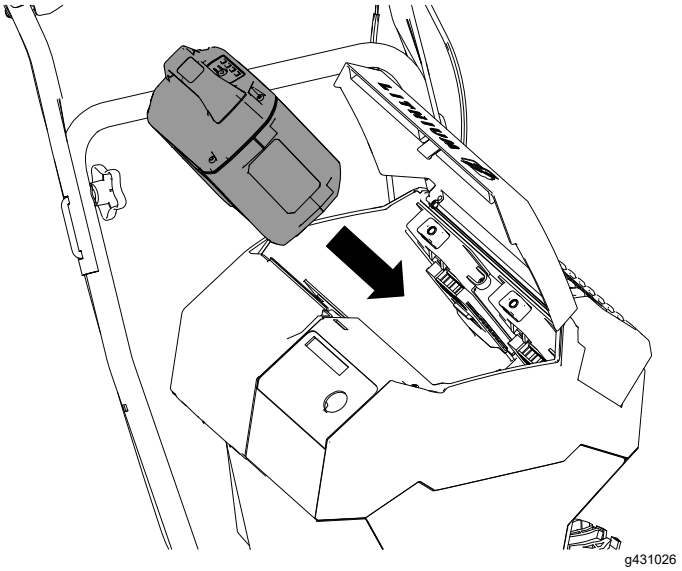

Figure 11

Turning On the Headlight

You can turn on the power to the headlight before operating the machine; turn the key to the ACCESSORY position (Figure 12).

In the ACCESSORY position, you can also view the state of charge of each installed battery. The position of each set of lights corresponds to the related battery cavity. If the battery state of charge is too low and needs to be charged, or if there is no battery in the corresponding cavity, the battery presence light does not turn on.

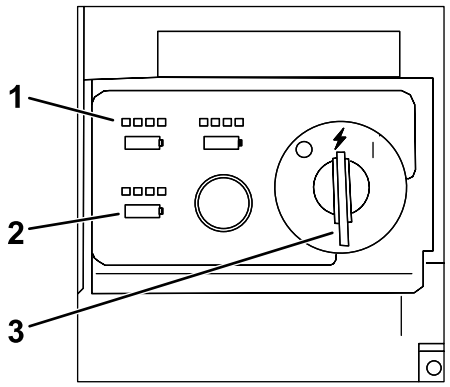

g348182

Figure 12

1. State-of-charge lights
2. Battery presence lights
3. Key switch in the ACCESSORY position

During Operation

Starting the Machine

Note: Use the battery pack only in temperatures that are within the appropriate range; refer to Specifications (page 14).

1. Ensure that the battery pack(s) are installed in the machine; refer to Installing the Battery Pack (page 14).
2. Insert the electric-start key into the control panel.
3. Turn the key to the ACCESSORY position.
4. Turn the key to the ON position to turn on the machine (Figure 13).

   Note: If the key is turned from OFF position to the ON too quickly, the machine may not start; ensure that the key stops briefly in the middle ACCESSORY position.

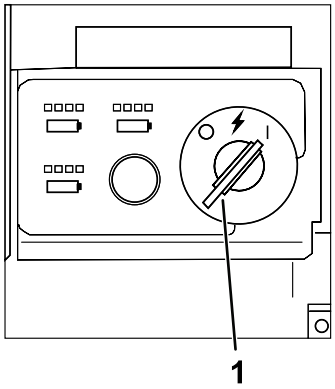

g347864

Figure 13

1. Key switch in ON position

Note: If the machine is turned on and left idling or operating without the auger engaged for an extended period, the motor shutoff timeout will engage, shutting off the machine. When the machine shuts off this way, it beeps to indicate that the timeout was engaged.

Activating ECO Mode

Using ECO mode may extend battery life by reducing rotor speed; use ECO mode whenever you are moving light snow, or moving snow a short distance. Activate ECO mode using the ECO button as shown in Figure 14.

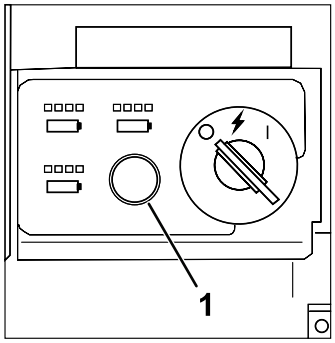

g347866

Figure 14

1. ECO mode button

Charging the Battery Pack

Important: **The battery pack is not fully charged when you purchase it. Before using the tool for the first time, place the battery pack in the charger and charge it until the LED display indicates the battery pack is fully charged. Read all safety precautions.**

Important: **Charge the battery pack only in temperatures that are within the appropriate range; refer to Specifications (page 14).**

Note: At any time, press the battery-charge-indicator button on the battery pack to display the current charge (LED indicators).

1. Ensure that the vents on the battery and charger are clear of any dust and debris.

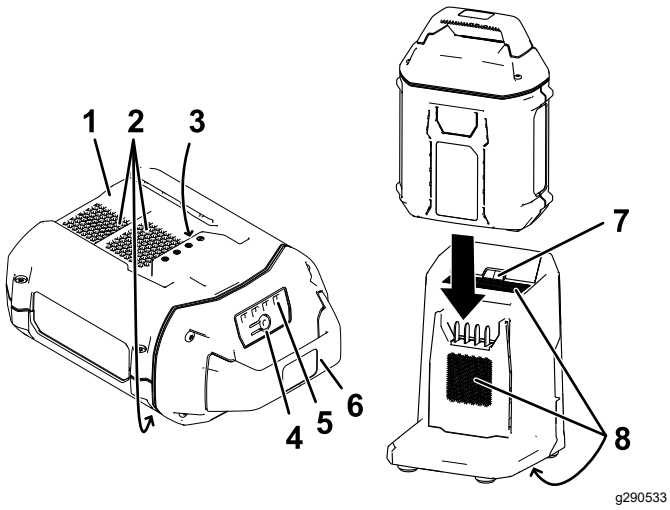

Figure 15

1. Battery pack cavity
2. Battery pack venting areas
3. Battery pack terminals
4. Battery-charge-indicator button
5. LED indicators (current charge)
6. Handle
7. Charger LED indicator light
8. Charger venting areas

2. Line up the cavity in the battery pack (Figure 15) with the tongue on the charger.
3. Slide the battery pack into the charger until it is fully seated (Figure 15).
4. To remove the battery pack, slide the battery backward out of the charger.
5. Refer to the following table to interpret the LED indicator light on the battery charger.

Indicator light	Indicates
Off	No battery pack inserted
Green blinking	Battery pack is charging
Green	Battery pack is charged
Red	Battery pack and/or battery charger is over or under the appropriate temperature range
Red blinking	Battery pack charging fault*

*Refer to Troubleshooting (page 23) for more information.

Important: **The battery can be left on the charger for short periods between uses.**

If the battery will not be used for longer periods, remove the battery from the charger; refer to Storage (page 22).

Engaging the Auger

Push the auger-lever lock at the base of the auger engagement lever forwards to release the auger lever from the locked position. Pull back on the auger lever to engage the auger.

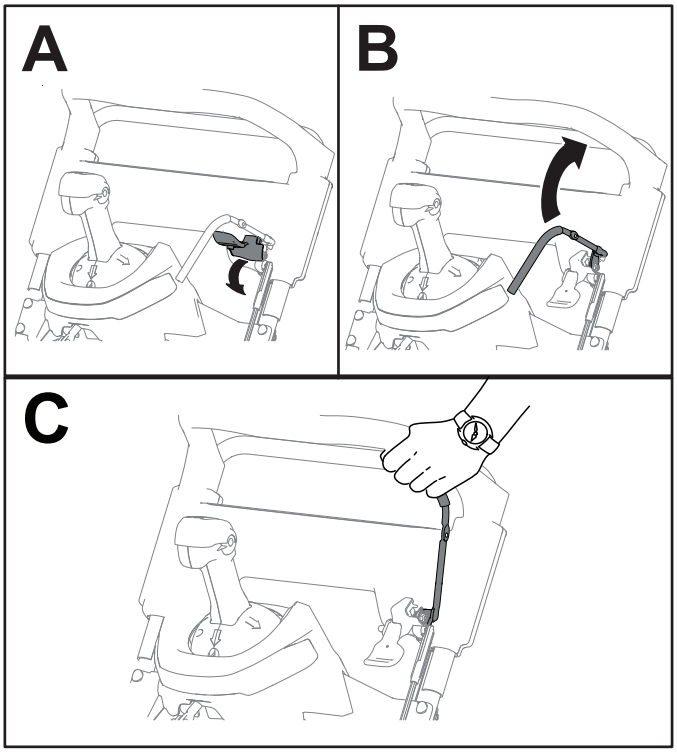

g431086

Figure 16

Disengaging the Auger

To disengage the auger, release the auger lever.

Self-Propelling the Machine

To operate the self-propel drive, simply walk with your hands on the upper handle and your elbows at your sides, and the machine automatically keeps pace with you.

Note: You can self-propel the machine with the auger engaged or disengaged.

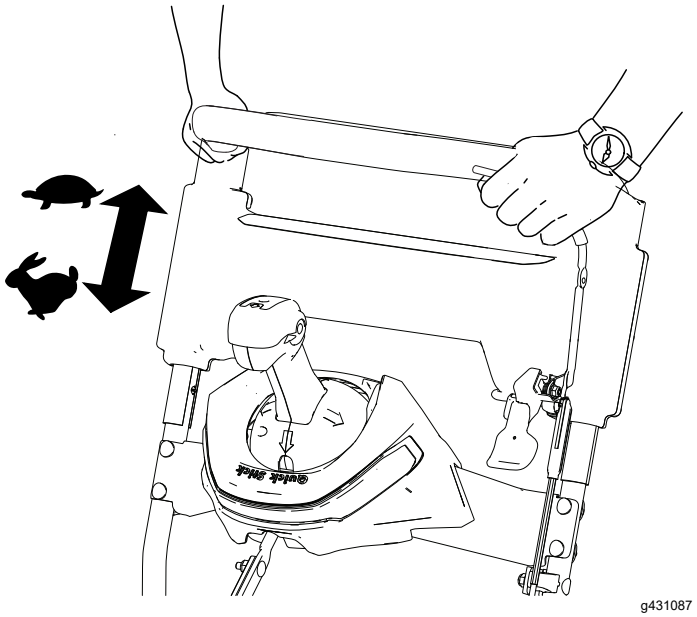

g431087

Figure 17

Shutting Off the Machine

To shut off the machine, move the key to the OFF position.

Operating the Quick Stick

Note: Fully press the blue knob to release the latch and operate the Quick Stick.

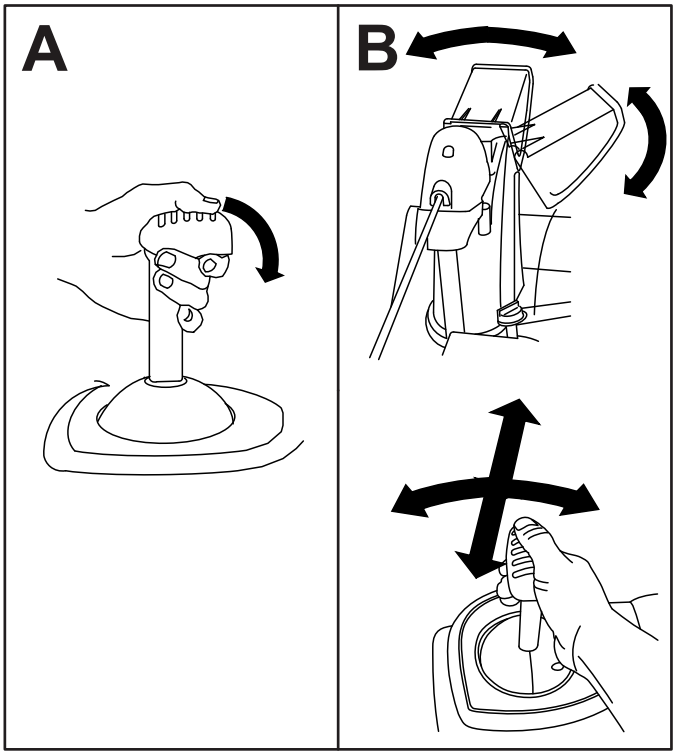

g431092

Figure 18

Clearing a Clogged Discharge Chute

⚠ WARNING

If the auger/impeller is running but there is no snow coming out of the discharge chute, the discharge chute may be clogged.

Never use your hands to clear a clogged discharge chute. This could result in personal injury.

1. While remaining in the operating position, release the self-propel handle.
2. Engage the auger.
3. Push down on the handle to raise the front of the machine a few centimeters (inches) off the pavement, then lift the handles quickly to bump the front of the machine onto the pavement.
4. Disengage the auger.
5. Repeat steps 1 through 4, if necessary, until a stream of snow comes out of the discharge chute.

Important: **If you cannot unclog the discharge chute by bumping the front of the machine, shut off the machine, wait for all moving parts to stop, and use a snow-cleanout tool (not included).**

Important: **Unclogging the discharge chute by bumping the front of the machine on the pavement may cause the skids to move. Adjust the skids and tighten the skid bolts securely; refer to Checking and Adjusting the Skids (page 20).**

Operating Tips

⚠ WARNING

The auger can throw stones, toys, and other foreign objects and cause serious personal injury to you or bystanders.

- **Keep the area to be cleared free of all objects that the rotor blades could pick up and throw.**
- **Keep all children and pets away from the area of operation.**

- Remove the snow as soon as possible after it falls.
- Overlap each swath to ensure complete snow removal.
- Discharge the snow downwind whenever possible.
- If the machine does not propel itself forward on slippery surfaces or in heavy snow, push forward on the handle, but allow the machine to work at its own pace.

After Operation

Shutting Off the Machine

1. Release the auger lever and stop the machine.
2. Turn the key to the OFF position and remove it from the machine (Figure 9).
3. Remove the battery pack(s); refer to Removing the Battery Pack from the Machine (page 19).

   Note: Whenever you are not using the machine, remove the battery pack(s) and the key from the machine.

   Note: If the machine is turned on and left idling or operating without the auger engaged for an extended period, the motor shutoff timeout will engage, shutting off the machine. When the machine shuts off this way, it beeps to indicate that the timeout was engaged.

To restart the machine refer to Starting the Machine (page 15).

Removing the Battery Pack from the Machine

1. Lift up the battery-compartment lid.
2. Press the battery pack-latch to release the battery pack and remove the battery pack (Figure 19).

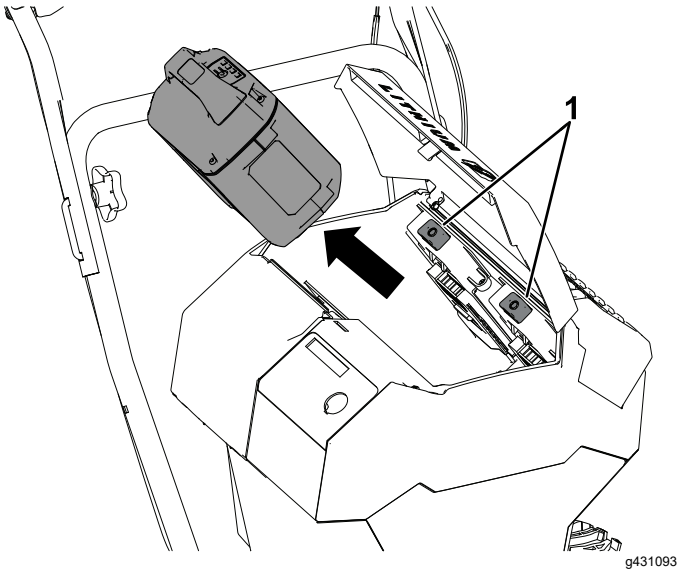

Figure 19

1. Battery pack-latch

3. Close the battery-compartment lid.

Preventing Freeze-up after Use

- In snowy and cold conditions, some controls and moving parts may freeze. **Do not use excessive force when trying to operate frozen controls.**
- After using the machine, engage the auger to clear any remaining snow from inside the housing. Rotate the Quick Stick to prevent it from freezing. Shut off the machine, wait for all moving parts to stop, remove the key and the battery, and remove all ice and snow from the machine.
- Clean off any snow and ice from the base of the chute.
- Rotate the discharge chute to the left and right to free it from any ice buildup.

Maintenance

Recommended Maintenance Schedule(s)

Maintenance Service Interval	Maintenance Procedure
After the first 2 hours	• Inspect the auger cable and adjust it if necessary. • Inspect the transmission cable and adjust it if necessary.
Yearly	• Check for loose hardware. • Check the skids and adjust them if necessary. • Inspect the auger cable and adjust it if necessary. • Inspect the transmission cable and adjust it if necessary.
Yearly or before storage	• Check the air pressure in the tires and inflate them to 116 to 137 kPa (17 to 20 psi). • Have an Authorized Service Dealer inspect and replace the traction-drive belt and/or the auger/impeller drive belt, if necessary.

Preparing for Maintenance

1. Move the machine to a level surface.
2. Stop the machine, remove the electric-start key, wait for all movement to stop, and remove the battery pack(s) from the machine before adjusting, servicing, cleaning, or storing the machine.

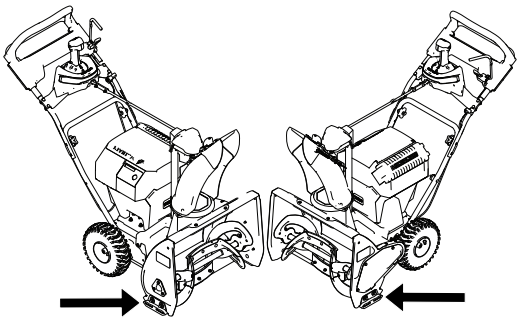

g431104

Checking and Adjusting the Skids

Service Interval: Yearly

Check the skids to ensure that the auger does not contact the paved surface. Adjust the skids as needed to compensate for wear (Figure 20).

1. Loosen the skid bolts.
2. Slide a 5 mm (3/16 inch) board underneath the scraper.

   Note: Using a thinner board results in a more aggressive scraper; using a thicker board results in a less aggressive scraper.
3. Lower the skids to the ground.

   Note: Ensure that the skids are flat on the ground.
4. Tighten the skid bolts.

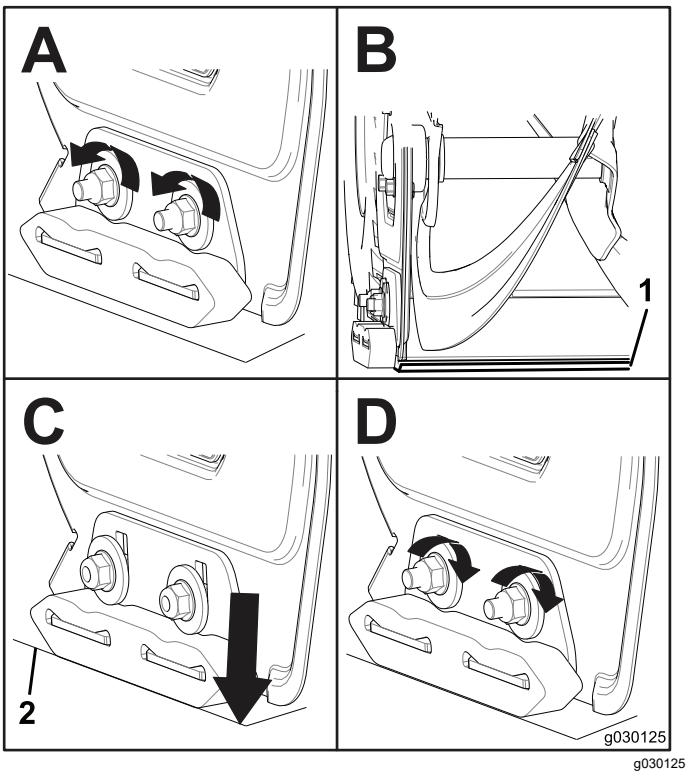

g030125

Figure 20

Adjusting the Auger Cable

Service Interval: After the first 2 hours

Yearly

If the drive belt slips or squeals under a heavy load, adjust the auger cable.

1. Loosen the nut on the lower cable clamp, but do not remove it (Figure 21).

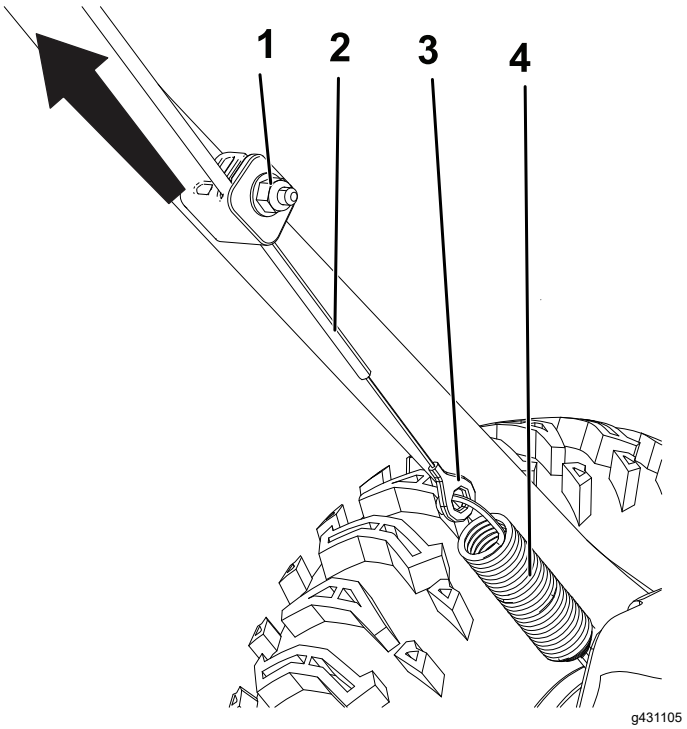

Figure 21

1. Nut
2. Cable
3. Connector
4. Spring

2. Pull the cable up to remove some slack (Figure 21).

   Important: **Do not remove all the slack from the cable. Removing all the slack from the cable prevents the auger from stopping properly.**

3. Hold the cable in place and tighten the nut (Figure 21).

Adjusting the Transmission Cable

Service Interval: After the first 2 hours

Yearly

If the wheels easily stall out, or if the wheels drive without engaging the self-propel handle, adjust the transmission cable.

1. Loosen the nut on the upper cable clamp, but do not remove it (Figure 22).

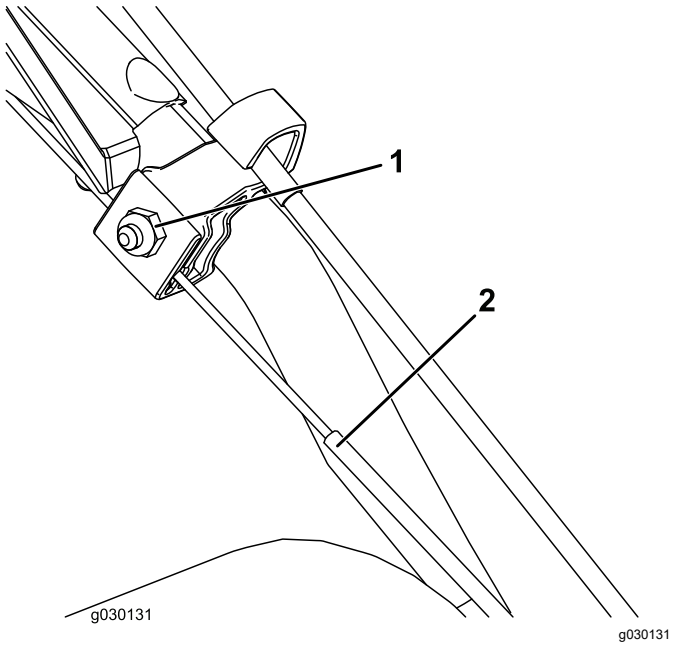

Figure 22

1. Nut
2. Cable

2. Pull the cable down to remove most of the slack in the cable (Figure 22).

   Important: **Do not remove all the slack from the cable. Removing all the slack from the cable may cause the wheels to engage without engaging the self-propel handle.**

3. Tighten the nut (Figure 22).

Replacing the Drive Belts

If the auger drive belt or the traction-drive belt becomes worn, oil-soaked, or otherwise damaged, have an Authorized Service Dealer replace the belt.

Storage

Storing the Machine

Important: **Store the machine, battery pack, and charger only in temperatures that are within the appropriate range; refer to Specifications (page 14).**

Important: **If you are storing the battery pack for the off-season, charge it until 2 or 3 LED indicators turn green on the battery. Do not store a fully charged or fully depleted battery. When you are ready to use the machine again, charge the battery pack until the left indicator light turns green on the charger or all 4 LED indicators turn green on the battery.**

- Disconnect the product from the power supply (i.e., remove the plug from the power supply or the battery pack), remove the key, and check for damage after use.
- Clean all foreign material from the product.
- Do not store the tool with the battery pack installed.
- When not in use, store the machine, battery pack, key, and battery charger out of the reach of children.
- Keep the machine, battery pack, key, and battery charger away from corrosive agents, such as garden chemicals and de-icing salts.
- To reduce the risk of serious personal injury, do not store the battery pack outside or in vehicles.
- Touch up chipped surfaces with paint available from an Authorized Service Dealer. Sand affected areas before painting, and use a rust preventative to prevent the metal parts from rusting.
- Tighten all loose screws, bolts, and locknuts. Repair or replace any damaged parts.
- Store the machine, battery pack, key, and battery charger in an enclosed clean, dry area.

Preparing the Battery Pack for Recycling

Important: **Upon removal, cover the terminals of the battery pack with heavy-duty adhesive tape. Do not attempt to destroy or disassemble the battery pack or remove any of its components.**

	Lithium-ion battery packs labeled with the Call2Recycle seal can be recycled at any participating retailer or battery recycling facility in the Call2Recycle program (US and Canada only). To locate a participating retailer or facility closest to you, please call 1-800-822-8837 or visit www.call2recycle.org. If you cannot locate a participating retailer or facility nearby, or if your rechargeable battery is not labeled with the Call2Recycle seal, please contact your local municipality for more information on how to responsibly recycle the battery. If you are located outside of the US and Canada, please contact your authorized Toro distributor.

Troubleshooting

Problem	Possible Cause	Corrective Action
The machine does not run or does not run continuously.	1. The motor shutoff timeout was reached because the auger was not engaged for an extended period of time.	1. No issue, restart the machine. The machine beeps to indicate that the motor shutoff timeout was reached.
	2. The key was turned from OFF to ON too quickly.	2. Turn the key slower, ensure that the key stops briefly in the middle ACCESSORY position.
	3. The battery pack is low on charge.	3. Charge the battery pack.
	4. The battery pack is not fully seated.	4. Ensure that the battery pack is inserted all the way into the housing and latched in place.
	5. The battery pack is over or under the appropriate temperature range.	5. Move the battery pack to a place where it is dry and the temperature is between 5°C (41°F) and 40°C (104°F).
	6. The battery pack has exceeded high amperage limits.	6. Cycle the key to the OFF position.
	7. There is moisture on the leads of the battery pack.	7. Allow the battery pack to dry or wipe it dry.
	8. The battery pack is damaged.	8. Replace the battery pack.
	9. There is another electrical problem with the machine.	9. Contact an Authorized Service Dealer.
The machine does not reach full power.	1. The battery pack charge capacity is too low.	1. Remove the battery pack from the machine and fully charge the battery pack.
	2. The air vents are blocked.	2. Clean the air vents.
The machine is producing a beeping sound.	1. The motor shutoff timeout was reached because the auger was not engaged for an extended period of time.	1. No issue, restart the machine. The machine beeps to indicate that the motor shutoff timeout was reached.
	2. The battery pack is low on charge.	2. Charge the battery pack.
	3. The machine is overloaded.	3. Walk at a slower pace while clearing snow or break up a large pile of snow before clearing it.
	4. There is another electrical problem with the machine.	4. Attempt the other troubleshooting actions, if the alarm still sounds, contact an Authorized Service Dealer.
The machine runs, but the machine discharges snow poorly or not at all.	1. You are trying to remove too much snow per swath.	1. Reduce the amount of snow removed per swath.
	2. You are trying to remove extremely heavy or wet snow.	2. Do not overload the machine with extremely heavy or wet snow.
	3. The discharge chute is plugged.	3. Unclog the discharge chute.
	4. The auger/impeller drive belt is loose or is off the pulley.	4. Install and/or adjust the auger/impeller drive belt; refer to www.Toro.com for servicing information or take the machine to an Authorized Service Dealer.
	5. The auger drive belt is worn or broken.	5. Replace the auger drive belt; refer to www.Toro.com for servicing information or take the machine to an Authorized Service Dealer.
	6. You are using the machine in ECO mode in heavy conditions.	6. Verify that ECO mode is not engaged in heavy conditions.
The discharge chute either does not lock into place or does not move.	1. The discharge-chute latch cable is not properly adjusted.	1. Adjust the discharge-chute latch cable.

Problem	Possible Cause	Corrective Action
The machine does not properly clear the snow off the surface.	1. The skids and/or scraper are not properly adjusted. 2. The pressure in the tires is not equal.	1. Adjust the skids and/or the scraper. 2. Check and adjust the pressure in 1 or both tires.
The LED battery charge light on the powerhead is red.	1. The battery temperature and/or voltage outside of operating range.	1. Verify the battery condition and charge level with charger.
The battery pack loses charge quickly.	1. The battery pack is over or under the appropriate temperature range. 2. The machine is overloaded.	1. Move the battery pack to a place where it is dry and the temperature is between 5°C (41°F) and 40°C (104°F). 2. Push the machine with less force.
The battery charger is not working.	1. The battery charger is over or under the appropriate temperature range. 2. The outlet that the battery charger is plugged into does not have power.	1. Unplug the battery charger and move it to a place where it is dry and the temperature is between 5°C (41°F) and 40°C (104°F). 2. Contact your licensed electrician to repair the outlet.
The LED indicator light on the battery charger is red.	1. The battery charger and/or battery pack is over or under the appropriate temperature range.	1. Unplug the battery charger and move the battery charger and battery pack to a place where it is dry and the temperature is between 5°C (41°F) and 40°C (104°F).
The LED indicator light on the battery charger is blinking red.	1. There is an error in the communication between the battery pack and the charger. 2. The battery pack is weak.	1. Remove the battery pack from the battery charger, unplug the battery charger from the outlet, and wait 10 seconds. Plug the battery charger into the outlet again and place the battery pack on the battery charger. If the LED indicator light on the battery charger is still blinking red, repeat this procedure again. If the LED indicator light on the battery charger is still blinking red after 2 attempts, contact your authorized service dealer if the battery is in warranty, or properly dispose of the battery pack at a battery recycling facility. 2. Contact your authorized service dealer if the battery is in warranty, or properly dispose of the battery pack at a battery recycling facility.

Notes:

Notes:

California Proposition 65 Warning Information

What is this warning?

You may see a product for sale that has a warning label like the following:



WARNING: Cancer and Reproductive Harm—www.p65Warnings.ca.gov.

What is Prop 65?

Prop 65 applies to any company operating in California, selling products in California, or manufacturing products that may be sold in or brought into California. It mandates that the Governor of California maintain and publish a list of chemicals known to cause cancer, birth defects, and/or other reproductive harm. The list, which is updated annually, includes hundreds of chemicals found in many everyday items. The purpose of Prop 65 is to inform the public about exposure to these chemicals.

Prop 65 does not ban the sale of products containing these chemicals but instead requires warnings on any product, product packaging, or literature with the product. Moreover, a Prop 65 warning does not mean that a product is in violation of any product safety standards or requirements. In fact, the California government has clarified that a Prop 65 warning "is not the same as a regulatory decision that a product is 'safe' or 'unsafe.'" Many of these chemicals have been used in everyday products for years without documented harm. For more information, go to https://oag.ca.gov/prop65/faqs-view-all.

A Prop 65 warning means that a company has either (1) evaluated the exposure and has concluded that it exceeds the "no significant risk level"; or (2) has chosen to provide a warning based on its understanding about the presence of a listed chemical without attempting to evaluate the exposure.

Does this law apply everywhere?

Prop 65 warnings are required under California law only. These warnings are seen throughout California in a wide range of settings, including but not limited to restaurants, grocery stores, hotels, schools, and hospitals, and on a wide variety of products. Additionally, some online and mail order retailers provide Prop 65 warnings on their websites or in catalogs.

How do the California warnings compare to federal limits?

Prop 65 standards are often more stringent than federal and international standards. There are various substances that require a Prop 65 warning at levels that are far lower than federal action limits. For example, the Prop 65 standard for warnings for lead is 0.5 µg/day, which is well below the federal and international standards.

Why don't all similar products carry the warning?

- Products sold in California require Prop 65 labelling while similar products sold elsewhere do not.
- A company involved in a Prop 65 lawsuit reaching a settlement may be required to use Prop 65 warnings for its products, but other companies making similar products may have no such requirement.
- The enforcement of Prop 65 is inconsistent.
- Companies may elect not to provide warnings because they conclude that they are not required to do so under Prop 65; a lack of warnings for a product does not mean that the product is free of listed chemicals at similar levels.

Why does Toro include this warning?

Toro has chosen to provide consumers with as much information as possible so that they can make informed decisions about the products they buy and use. Toro provides warnings in certain cases based on its knowledge of the presence of one or more listed chemicals without evaluating the level of exposure, as not all the listed chemicals provide exposure limit requirements. While the exposure from Toro products may be negligible or well within the "no significant risk" range, out of an abundance of caution, Toro has elected to provide the Prop 65 warnings. Moreover, if Toro does not provide these warnings, it could be sued by the State of California or by private parties seeking to enforce Prop 65 and subject to substantial penalties.



Count on it.