DREO | Mini Split Smart Air Conditioner
321S / 342S / 363S

USER MANUAL

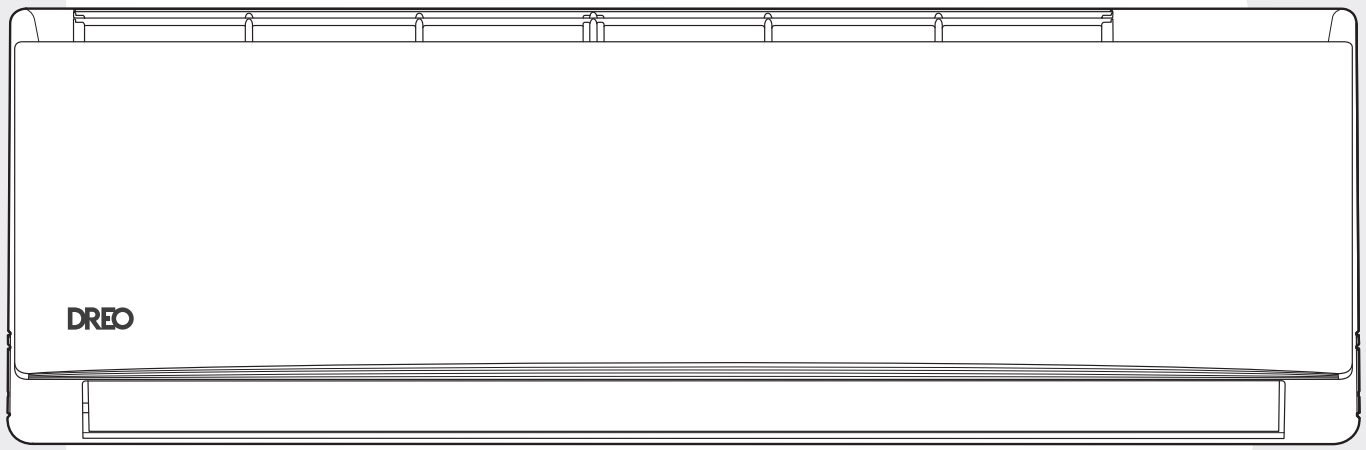

Thanks for Choosing DREO!

Your support means the world to us.
We hope you enjoy our product as much as we did creating it.

CONTENTS

01 IMPORTANT SAFETY INSTRUCTIONS 1-10

02 ASSEMBLING YOUR APPLIANCE 11-27

03 CONNECTING TO YOUR APPLIANCE 28

04 KNOWING YOUR APPLIANCE 29-30

05 USING YOUR APPLIANCE 31-32

06 CLEANING AND MAINTENANCE 33

07 TROUBLESHOOTING 34-35

08 DREO CUSTOMER CARE 36-37

IMPORTANT SAFETY INSTRUCTIONS

01

Safety Notice



Caution: Risk of fire.
The air conditioner is charged with inflammable refrigerant **R32**.



Before using the air conditioner, please read the instruction manual first.



Before installing the air conditioner, please read the instruction manual first.



Before repairing the air conditioner, please read the technical service manual first.

Compared with common refrigerant, **R32** is an environmental-friendly refrigerant that has no harm to the ozone layer and weak greenhouse effect. Its GWP is 675. Because of its thermodynamic characteristics, **R32** requires a smaller charging quantity to reach high energy efficiency. It is inflammable and odourless, but may cause explosion under certain circumstances.

Precautions

SAFETY RULES AND RECOMMENDATIONS FOR THE INSTALLER

1. Read this guide before installing and using the appliance.
2. During the installation of the indoor and outdoor units, access to the working area should be forbidden to children. Unforeseeable accidents could happen.
3. Make sure that the base of the outdoor unit is firmly fixed.
4. Check that air cannot enter the refrigerant system and check for refrigerant leaks when turn on the air conditioner.
5. Carry out a test cycle after installing the air conditioner and record the operating data.
6. Protect the unit with a fuse of suitable capacity for the maximum input current or with another overload protection device.
7. Ensure that the mains voltage corresponds to that stamped on the rating plate. Keep the switch or power terminal clean. Connect the power terminal correctly and firmly into the socket, there by avoiding the risk of electric shock or fire due to insufficient contact.
8. The appliance must be equipped with devices capable of disconnection from the mains power supply, have a contact separation in all poles to provide full disconnection under "over voltage category III conditions", these devices must also be incorporated into the fixed wiring in accordance with the wiring rules.
9. The air conditioner must be installed by professional or qualified persons. Do not try to install the conditioner alone, always contact specialized technical personnel.
10. Do not install the appliance at a distance of less than 50 cm from inflammable substances (alcohol,etc.) Or from pressurized containers (e. g. spray cans).
11. If the appliance is used in areas without the possibility of ventilation, precautions must be taken to prevent any leaks of refrigerant gas from remaining in the environment and creating a danger of fire.
12. The packaging materials are recyclable and should be disposed of in the separate waste bins.Take the air conditioner at the end of its useful life to a special waste collection center for disposal.
13. Only use the air conditioner as instructed in this booklet. These instructions are not intended to cover every possible condition and situation. As with any electrical household appliance, common sense and caution are therefore always recommended for installation, operation and maintenance.
14. The appliance must be installed in accordance with applicable national regulations.
15. Before accessing the terminals, all the power circuits must be disconnected from the power supply.
16. This appliance can be used by children aged from 8 years and above and persons with reduced physical, sensory or mental capabilities or lack of experience and knowledge if they have been given supervision or instruction concerning use of the appliance in a safe way and under stand the hazards involved. Children shall not play with the appliance. Cleaning and user maintenance shall not be made by children without supervision.
17. Cleaning and maintenance must be carried out by specialized technical personnel. In any case disconnect the appliance from the mains electricity supply before carrying out any cleaning or maintenance.
18. Do not pull out the power terminal to switch off the appliance when it is in operation, since this could create a spark and

cause a fire, etc.

19. This appliance has been made for air conditioning domestic environments and must not be used for any other purpose, such as for drying clothes, cooling food, etc.
20. Always use the appliance with the air filter mounted. Air conditioning without air filter could cause an excessive accumulation of dust and/ or lead to inner parts function failure.
21. The user is responsible for having the appliance installed by a qualified technician, who must check that earthing/ grounding is done in accordance with current legislation and insert a thermos magnetic circuit breaker.
22. The batteries in the remote controller must be recycled or disposed of properly. For disposal of scrap batteries, please discard the batteries as sorted municipal waste at the accessible collection point.
23. Never remain directly exposed to the flow of cold air for a long time. The direct and prolonged exposition to cold air could be dangerous for your health. Particular care should be taken in the rooms where there are children, old or sick people.
24. If the appliance gives off smoke or there is a smell of burning, immediately cut off the power supply and contact the Service Center. The prolonged use of the device in such conditions could cause fire or electrocution.
25. Have repairs carried out only by an authorised Service Center of the manufacturer. Incorrect repair could expose the user to the risk of electric shock, etc.
26. Unhook the automatic switch if you foresee not to use the device for a long time. The airflow direction must be properly adjusted.
27. The flaps must be directed downwards in the heating mode and upwards in the cooling mode.
28. Ensure that the appliance is disconnected from the power supply when it intends to keep inoperative for a long period and before carrying out any cleaning or maintenance.
29. Selecting the most suitable temperature can prevent damage to the appliance.

SAFETY RULES AND PROHIBITIONS

1. Do not bend, tug or compress the power cord since this could damage it. Electrical shocks or fire are probably due to a damaged power cord. Specialized technical personnel only is recommended to replace a damaged power cord.
2. Do not use extensions or gang modules.
3. Do not touch the appliance when barefoot or parts of the body are wet or damp.
4. Do not obstruct the air inlet or outlet of the indoor or the outdoor unit. The obstruction of these openings causes a reduction in the operative efficiency of the conditioner with possible consequent failures or damages.
5. In no way alter the characteristics of the appliance.
6. Do not install the appliance in environments where the air could contain flammable gas, oil or sulphur or near sources of heat.
7. This appliance is not intended for use by persons (including children) with reduced physical,sensory or mental capabilities. or lack of experience and knowledge. unless they have been given supervision or instruction concerning use of the appliance by a person responsible for their safety.
8. Do not climb onto or place any heavy or hot objects on top of the appliance.
9. Do not leave windows or doors open for long when the air conditioner is operating.
10. Do not direct the airflow onto plants or animals.
11. A long direct exposition to the flow of cold air of the conditioner could have negative effects on plants and animals.
12. Do not put the conditioner in contact with water. The electrical insulation could be damaged and thus causing electrocution.
13. Do not climb onto or place any objects on the outdoor unit.
14. Never insert a stick or similar object into the appliance. It could cause injury.
15. Children should be supervised to ensure that they do not play with the appliance.
16. This unit is equipped with a refrigerant leak detector for safety. To be effective, the unit must be electrically powered at all times after installation, other than when servicing.
    (Some models have refrigerant leak sensors, subject to the actual product received.)
17. This refrigerant sensor is only replaced with a manufacturer approved sensor. If the sensor is replaced only as part of the component assembly, the component should be labeled.
    (Some models have refrigerant leak sensors, subject to the actual product received.)
18. The appliance shall be installed according to the manufacturer's instructions, and the ventilation pipe shall not exceed the maximum length and number of turns specified by the manufacturer.
19. Appliances shall be installed according to the instructions. Appliances that can be installed in different locations should be tested in all locations permitted by the manufacturer. The intake or exhaust openings should not be covered and the manufacturer's recommended air filter should be installed according to the instructions.
20. Warning: Before accessing the terminals, all power circuits must be disconnected.

Instruction for Servicing (R32)

1. Check the information in this manual to find out the dimensions of space needed for proper installation of the device, including the minimum distances allowed compared to adjacent structures.
2. Appliance shall be installed, operated and stored in a room with a floor area larger than 4m².

3. The installation of pipe-work shall be kept to a minimum.
4. The pipe-work shall be protected from physical damage, and shall not be installed in an unventilated space if the space is smaller than 4m².
5. The compliance with national gas regulations shall be observed.
6. The mechanical connections shall be accessible for maintenance purposes.
7. Follow the instructions given in this manual for handling, installing, cleaning, maintaining and disposing of the refrigerant.
8. Make sure ventilation openings clear of obstruction.
9. Notice: The servicing shall be performed only as recommended by the manufacturer.
10. Warning: The appliance shall be stored in a well-ventilated area where the room size corresponds to the room area as specified for operation.
11. Warning: The appliance shall be stored in a room without continuously operating open flames(for example an operating gas appliance) and ignition sources (for example an operating electric heater).
12. The appliance shall be stored so as to prevent mechanical damage from occurring.
13. It is appropriate that anyone who is called upon to work on a refrigerant circuit should hold a valid and up-to-date certificate from an assessment authority accredited by the industry and recognizing their competence to handle refrigerants, in accordance with the assessment specification recognized in the industrial sector concerned. Service operations should only be carried out in accordance with the recommendations of the equipment manufacturer. Maintenance and repair operations that require the assistance of other qualified persons must be conducted under the supervision of the person competent for the use of flammable refrigerants.
14. Every working procedure that affects safety means shall only be carried out by competent persons.
15. **Warning:**

* Do not use any means to accelerate the defrosting process or clean the frost on your own. Follow the recommended guidelines from the manufacturer.
* The appliance shall be stored in a room without continuously operating ignition sources (for example: open flames, an operating gas appliance or an operating electric heater.
* Do not pierce or burn.
* Be aware that refrigerants may not containan odor.

Important Considerations

1. The air conditioner must be installed by professional personnel and the Installation manual is used only for the professional installation personnel! The installation specifications should be subject to our after-sale service regulations.
2. When filling the combustible refrigerant, any of your rude operations may cause serious injury or injuries to human body and objects.
3. A leak test must be done after the installation completed.
4. It is a must to do the safety inspection before maintaining or repairing an air conditioner using combustible refrigerant in order to ensure that the fire risk is reduced to minimum.
5. It is necessary to operate the machine under a controlled procedure in order to ensure that any risk arising from the combustible gas or vapor during the operation is reduced to minimum.
6. Requirements for the total weight of filled refrigerant and the area of a room to be equipped with an air conditioner (are shown as in the following Tables GG.1 and GG.2)

The maximum charge and the required minimum floor area
m_1= (6 m³) x LFL, m_2=(52 m³) x LFL, m_3= (260 m³) x LFL
Where LFL is the lower flammable limit in kg/ m³, **R32** LFL is 0.306 kg/ m³.
For the appliances with a charge amount m_1< M = m_2:
The maximum charge in a room shall be in accordance with the following:
Mmax= 2.5 x (LFL)(5/4) x h_0 x (A)1/2 not to exceed Mmax=SF x LFL x h_0 x A (GG.3DV)
The required minimum floor area Amin to install an appliance with refrigerant charge M(kg) shall be in accordance with following: Amin= (M/ (2.5 x (LFL)(5/4) x h_0))² not less than Amin= M/ (SF x LFL x h_0) (GG.4DV)

Refrigerant Charge and Room Area Limitations

In UL/CSA 60335-2-40,**R32** refrigerant is classified as class A2L, which is mildly flammable.
Therefore, R32 refrigerant is suitable for systems needing additional refrigerant charge and which will limit the area of the rooms being served by the system. Similarly, the total amount of refrigerant in the system shall be less than or equal to the allowable maximum refrigerant charge. The allowable maximum refrigerant charge depends on the area of the rooms being served by the system.

NOTE:
The nouns in this section are explained as follows:
Mc: The actual refrigerant charge in the system.

A: The actual room area where the appliance is installed.
Amin: The required minimum room area.
Mmax: The allowable maximum refrigerant charge in a room.
Qmin: The minimum circulation airflow.
Anvmin: The minimum opening area for connected rooms.

The room area calculation requirements

CAUTION:

The space considered shall be any space which contains refrigerant-containing parts or into which refrigerant could be release.
The room area (A) of the smallest, enclosed. occupied space shall be used in the determination of the refrigerant quantity limits.
For determination of room area (A) when used to calculate the refrigerant charge limit, the following shall apply.
The room area (A) shall be defined as the room area enclosed by the projection to the base of the walls, partitions and doors of the space in which the appliance is installed.
Spaces connected by only drop ceilings, ductwork, or similar connections shall not be considered a single space.
Units mounted higher than 70-55/64 inches and spaces divided by partition walls that are no higher than 62-63/64 inches shall be considered a single space.
Rooms on the same floor and connected by an open passageway between the spaces can be considered a single room when determining compliance to Amin, if the passageway complies with all of the following.
1. It is a permanent opening.
2. It extends to the floor.
3. It is intended for people to walk through.

The area of the connected rooms, on the same floor, connected by permanent opening in the walls and/or doors between occupied spaces, including gaps between the wall and the floor can be considered a single room when determining compliance to Anvmin, provided all of the following conditions are met as fig. 2-1.
1. Low level opening
1) The opening shall not be less than Anvmin in Table2-1.
2) The area of any openings above 11-13/16 inches from the floor shall not be considered in determining compliance with Anvmin.
3) At least 50% of the opening area of Anvmin shall be below 7-7/8 inches from the floor.
4) The bottom of the opening is not more than 3-15/16 inches from the floor.
5) The opening is a permanent opening that cannot be closed.
6) For openings extending to the floor the height shall not be less than 25/32 inches above the surface of the floor covering.
2. High level opening
1) The opening shall not be less than 50% of Anvmin in Table2-1.
2) The opening is a permanent opening that cannot be closed.
3) The opening shall be at least 59 inches above the floor.
4) The height of the opening is not less than 25/32 inches.

NOTE:
The requirement for the second opening can be met by drop ceilings, ventilation ducts, or similar arrangements that provide an airflow path between the connected rooms.
The minimum opening for natural ventilation (Anvmin) in connected rooms is related to the room area (A). the actual refrigerant charge of refrigerant in the system (Mc), and the allowable MAXIMUM REFRIGERANT CHARGE in the system (Mmax), Anvmin can be determined according to Table 2-1.

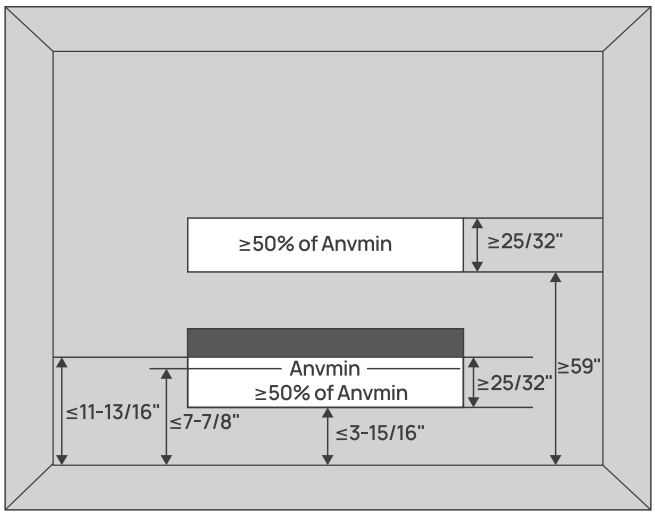

Fig.2-1 Opening Conditions for Connected Rooms
The minimum opening area for connected rooms. Note: Take the Mc=1.73kgs an example.

Table 2.1			
A(m²)	Mc(kg)	Mmax(kg)	Anvmin(m²)
4	1.73	1.48	0.0058
7	1.73	2.59	0.0000
10	1.73	3.7	0.0000
15	1.73	5.55	0.0000
20	1.73	7.4	0.0000
30	1.73	11.1	0.0000

Table GG.1 - Maximum charge (kg)									
Category	LFL (kg/m³)	h₀ (m)	Floor area (m²)						
			4	7	10	15	20	30	50
R32	0.306	2.5	1.53	2.68	3.83	5.51	5.51	7.79	10.06
		2.8	1.71	3	4.28	6.17	6.17	8.73	11.27
		3	1.84	3.21	4.59	6.61	6.61	9.35	12.07

For R32 refrigerant charge amount and minimum room area:

The machine you purchased may be one of the types in the table below. The indoor and outdoor units are designed to be used together. Please check the machine you purchased. The indoor unit should be installed at least 8.2ft /2.5m above from the floor, and the minimum room area of operating or storage should be as specified in the following table:

Table GG.2-Minimum room area (m²)								
Category	LFL (kg/m³)	h₀ (m)	Charge amount(M) (kg) Minimum room area (m²)						
			0.58	0.60	1.00	1.07	1.20	1.58	2.00
R32	0.306	2.5	1.52	1.57	2.61	2.80	3.14	4.13	5.23
		2.8	1.35	1.40	2.33	2.50	2.80	3.69	4.67
		3	1.26	1.31	2.18	2.33	2.61	3.44	4.36

Refrigerant charging			
Model	9K	12K	18K
R32(g) Standard	600	580	1070
R32(g) Max	675	655	1195

		Read operator's manual
Caution: Risk of fire		Operating instructions
		Read technical manual
Caution: Risk of fire		

Information on servicing:

1) Checks to the area

Prior to beginning work on systems containing flammable refrigerants, safety checks are necessary to ensure that the risk of ignition is minimized. For repair to the refrigerating system, the following precautions shall be complied with prior to conducting work on the system.

2) Work procedure

Work shall be undertaken under a controlled procedure so as to minimize the risk of a flammable gas or vapor being present while the work is being performed.

3) General work area

All maintenance staff and others working in the local area shall be instructed on the nature of work being carried out. Work in confined spaces shall be avoided. The area around the workspace shall be sectioned off. Ensure that the conditions within the area have been made safe by control of flammable material

4) Checking for presence of refrigerant

The area shall be checked with an appropriate refrigerant detector prior to and during work, to ensure the technician is aware of potential flammable atmospheres. Ensure that the leak detection equipment being used is suitable for use with flammable refrigerants, i. e. non-sparking, adequately sealed or intrinsically safe.

5) Presence of fire extinguisher

If any hot work is to be conducted on the refrigeration equipment or any associated parts, appropriate fire extinguishing equipment shall be available to hand. Have a dry powder or CO_2 fire extinguisher adjacent to the charging area.

6) No ignition sources

No person carrying out work in relation to a refrigeration system which involves exposing any pipe work shall use any sources of ignition in such a manner that it may lead to the risk of fire or explosion.All possible ignition sources, including cigarette smoking, should be kept sufficiently far away from the site of installation, repairing, removing and disposal, during which refrigerant can possibly be released to the surrounding space. Prior to work taking place, the area around the equipment is to be surveyed to make sure that there are no flammable hazards or ignition risks." No Smoking" signs shall be displayed.

7) Ventilated area

Ensure that the area is in the open or that it is adequately ventilated before breaking into the system or conducting any work that will produce heat. A degree of ventilation shall continue during the period that the work is carried out. The ventilation should safely disperse any released refrigerant and preferably expel it externally into the atmosphere.

8) Checks to the refrigeration equipment

Where electrical components are being changed, they shall be fit for the purpose and to the correct specification. At all times the manufacturer's maintenance and service guidelines shall be followed.

If in doubt consult the manufacturer's technical department for assistance.

The following checks shall be applied to installation using flammable refrigerant:

– The charge size is in accordance with the room size within which the refrigerant containing parts are installed;

– The ventilation machinery and outlets are operating adequately and are not obstructed;

– If an indirect refrigerating circuit is being used, the secondary circuit shall be checked for the presence of refrigerant;

– Marking to the equipment continues to be visible and legible. Markings and signs that are illegible shall be corrected;

– Refrigeration pipe or components are installed in a position where they are unlikely to be exposed to any substance which may corrode refrigerant containing components, unless the components are constructed of materials which are inherently resistant to being corroded or are suitably protected against being so corroded.

9) Checks to electrical devices

Repair and maintenance to electrical components shall include initial safety checks and component inspection procedures. If a fault exists that could compromise safety, then no electrical supply shall be connected to the circuit until it is satisfactorily dealt with. If the fault cannot be corrected immediately but it is necessary to continue operation, an adequate temporary solution shall be used. This shall be reported to the owner of the equipment so all parties are advised.

Initial safety checks shall include:

- That capacitors are discharged: this shall be done in a safe manner to avoid possibility of sparking;
- That no live electrical components and wiring are exposed while charging, recovering or purging the system;
- That there is continuity of earth bonding.

Repairs to sealed components

Sealed electrical components shall be replaced.

Repair to intrinsically safe components

Intrinsically safe components must be replaced.

Cabling

Check that cabling will not be subject to wear, corrosion, excessive pressure, vibration, sharp edges or any other adverse environmental effects. The check shall also take into account the effects of aging or continual vibration from sources such as compressors or fans.

Detection of flammable refrigerants

Under no circumstances shall potential sources of ignition be used in the searching for or detection of refrigerant leaks. A halide torch (or any other detector using a naked flame) shall not be used.

Leak detection methods

The following leak detection methods are deemed acceptable for systems containing flammable refrigerants.
Electronic leak detectors shall be used to detect flammable refrigerants, but the sensitivity may not be adequate, or may need re-calibration.(Detection equipment shall be calibrated in a refrigerant-free area.) Ensure that the detector is not a potential source of ignition and is suitable for the refrigerant used. Leak detection equipment shall be set at a percentage of the LFL of the refrigerant and shall be calibrated to the refrigerant employed and the appropriate percentage of gas (25 % maximum) is confirmed. Leak detection fluids are suitable for use with most refrigerants but the use of detergents containing chlorine shall be avoided as the chlorine may react with the refrigerant and corrode the copper pipe-work. If a leak is suspected, all naked flames shall be removed/ extinguished. If a leakage of refrigerant is found which requires brazing, all of the refrigerant shall be recovered from the system,or isolated (by means of shut off valves) in a part of the system remote from the leak. Oxygen free nitrogen (OFN) shall then be purged through the system both before and during the brazing process.

Removal and evacuation

When breaking into the refrigerant circuit to make repairs or for any other purpose conventional procedures shall be used. However, it is important that best practice is followed since inflammability is a consideration. The following procedure shall be adhered to:
- Remove refrigerant;
- Purge the circuit with inert gas;
- Evacuate;
- Purge again with inert gas;
- Open the circuit by cutting or brazing.

The refrigerant charge shall be recovered into the correct recovery cylinders. The system shall be flushed with OFN to render the unit safe. This process may need to be repeated several times.
Compressed air or oxygen shall not be used for this task.
Flushing shall be achieved by breaking the vacuum in the system with OFN and continuing to fill until the working pressure is achieved, then venting to atmosphere, and finally pulling down to a vacuum. This process shall be repeated until no refrigerant is within the system. When the final OFN charge is used, the system shall be vented down to atmospheric pressure to enable work to take place. This operation is absolutely vital if brazing operations on the pipe-work are to take place.
Ensure that the outlet for the vacuum pump is not close to any ignition sources and there is ventilation available.

Decommissioning

Before carrying out this procedure, it is essential that the technician is completely familiar with the equipment and all its detail. It is recommended good practice that all refrigerants are recovered safely. Prior to the task being carried out, an oil and refrigerant sample shall be taken in case analysis is required prior to re-use of reclaimed refrigerant. It is essential that electrical power is available before the task is commenced.

1) Become familiar with the equipment and its operation.
2) Isolate system electrically.
3) Before attempting the procedure, ensure that:
   - mechanical handling equipment is available, if required, for handling refrigerant cylinders;
   - all personal protective equipment is available and being used correctly;
   - the recovery process is supervised at all times by a competent person;
   - recovery equipment and cylinders conform to the appropriate standards.
4) Pump down refrigerant system, if possible.
5) If a vacuum is not possible, make a manifold so that refrigerant can be removed from various parts of the system.
6) Make sure that cylinder is situated on the scales before recovery takes place.
7) Start the recovery machine and operate in accordance with manufacturer's instructions.
8) Do not overfill cylinders.(No more than 80% volume liquid charge).
9) Do not exceed the maximum working pressure of the cylinder, even temporarily.
10) When the cylinders have been filled correctly and the process completed, make sure that the cylinders and the equipment are removed from site promptly and all isolation valves on the equipment are closed off.
11) Recovered refrigerant shall not be charged into another refrigeration system unless it has been cleaned and checked.

Labeling

Equipment shall be labled stating that it has been de-commissioned and emptied of refrigerant. The label shall be dated and signed. Ensure that there are labels on the equipment stating the equipment contains flammable refrigerant.

Recovery

When removing refrigerant from a system, either for servicing or decommissioning, it is recommended good practice that all refrigerants are removed safely.

When transferring refrigerant into cylinders, ensure that only appropriate refrigerant recovery cylinders are employed. Ensure that the correct number of cylinders for holding the total system charge are available. All cylinders to be used are designated for the recovered refrigerant and labled for that refrigerant(i. e. Special cylinders for the recovery of refrigerant). Cylinders shall be complete with pressure-relief valve and associated shut-off valves in good working order.

Empty recovery cylinders are evacuated and, if possible, cooled before recovery occurs.

The recovery equipment shall be in good working order with a set of instructions concerning the equipment that is at hand and shall be suitable for the recovery of all appriate refrigerants includeing, when applicable, flammable refrigerants. In addition,a set of calibrated weighing scales shall be available and in good working order. Hoses shall be complete with leak-free disconnect couplings and in good condition. Before using the recovery machine, check that it is in satisfactory working order, has been properly maintained and that any associated electrical components are sealed to prevent ignition in the event of a refrigerant release. Consult manufacturer if in doubt.

The recovered refrigerant shall be returned to the refrigerant supplier in the correct recover cylinder, and the relevant waste transfer note arranged. Do not mix refrigerants in recovery units and especially not in cylinders.

If compressors or compressor oils are to be removed, ensure that they have been evacuated to an acceptable level to make certain that flammable refrigerant does not remain within the lubricant.

The evacuation process shall be carried out prior to returning the compressor to the suppliers.

Only electric heating to the compressor body shall be employed to accelerate this process. When oil is drained from a system, it shall be carried out safely.

Warning:

1) Do not use means to accelerate the defrosting process or to clean, other than those recommended by the manufacturer;
2) The appliance shall be stored in a room without continuously operating ignition sources (for example: open flames, an operating gas appliance or an operating electric heater.
3) Do not pierce or burn.
4) Be aware that refrigerants may not contain an odour.

Statement

1) Please use the flammable gas detector to check before unload and open the container.
2) No fire source and smoking.
3) That pipe work shall be protected from physical damage and, in the case of FLAMMABLE REFRIGERANTS, shall not be installed in an unventilated space, if that space is smaller than Amin in Annex GG, except for A2L REFRIGERANTS where the installed pipes comply with UL 60335-2-40 Clause. In case of field charge, the effect on REFRIGERANT CHARGE caused by the different pipe length has to be quantified;
4) That compliance with national gas regulations shall be observed;
5) Be shipped with a FLAMMABLE REFRIGERANT CHARGE. Joints made in the installation between parts of the REFRIGERATING SYSTEM, with at least one part charged, shall be made in accordance with the following.
   - A brazed, welded, or mechanical connection shall be made before opening the valves to permit refrigerant to flow between the REFRIGERATING SYSTEM parts. A vacuum valve shall be provided to evacuate the interconnecting pipe and/or any uncharged REFRIGERATING SYSTEM part.
   - Mechanical connectors used indoors shall comply with ISO 14903. When mechanical connectors are reused indoors, sealing parts shall be renewed. When flared joints are reused indoors, the flare part shall be re-fabricated.
   - Refrigerant tubing shall be protected or enclosed to avoid damage.
   - Flexible refrigerant connectors (such as connecting lines between the indoor and outdoor unit) that may be displaced during NORMAL OPERATION shall be protected against mechanical damage.
6) That pipe work including piping material, pipe routing, and installation shall include protection from physical damage in operation and service, and be in compliance with national and local codes and standards, such as ASHRAE 15, ASHRAE 15.2, IAPMO Uniform Mechanical Code, ICC International Mechanical Code, or CSA B52. All field joints shall be accessible for inspection prior to being covered or enclosed;
7) That after completion of field piping for split systems, the field pipe work shall be pressure tested with an inert gas and then vacuum tested prior to refrigerant charging, according to the following requirements;
8) The appliance shall be stored so as to prevent mechanical damage from occurring.
9) Working personnel for maintenance, service and repair operations. Every working procedure that affects safety means shall only be carried out by competent persons according to Annex HH.Examples for such working procedures are:
   - breaking into the refrigerating circuit;
   - opening of sealed components;
   - opening of ventilated enclosures.

Installation Safety Principles

1. Site Safety


Open Flames Prohibited

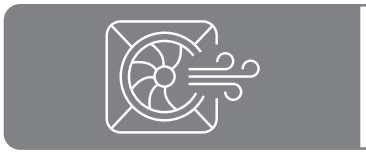
Ventilation Necessary

2. Operation Safety


Mind Static Electricity


Must wear protective clothing and anti-staticgloves


Don't use mobile phone

3. Installation Safety

- Refrigerant Leak Detector
- Appropriate Installation Location

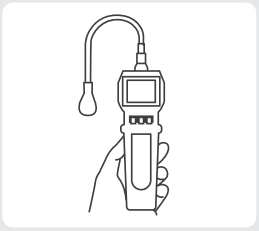

The left picture is the schematic diagram of a refrigerant leak detector.

Please note that:

1) The installation site should be well-ventilated.
2) The sites for installing and maintaining an air conditioner using Refrigerant R32 should be free from open fire or welding, smoking, drying oven or any other heat source higher than 548°C which easily produces open fire.
3) When installing an air conditioner, it is necessary to take appropriate anti-static measures such as wear anti-static clothing and/ or gloves.
4) It is necessary to choose the site convenient for installation or maintenance wherein the air inlets and outlets of the indoor and outdoor units should be not surrounded by obstacles or close to any heat source or combustible and/ or explosive environment.
5) If the indoor unit suffers refrigerant leak during the installation, it is necessary to immediately turn off the valve of the outdoor unit and all the personnel should go out till the refrigerant leaks completely for 15 minutes. If the product is damaged, it is a must to carry such damaged product back to the maintenance station and it is prohibited to weld the refrigerant pipe or conduct other operations on the user's site.
6) It is necessary to avoid the places where there are other electrical products, power switch plugs and sockets, kitchen cabinet, bed, sofa and other valuables right under the lines on two sides of the indoor unit.

<table>
<tr><th colspan="2">Operating condition</th><th>Noise pollution</th></tr>
<tr><td colspan="2">Inverter air conditioner</td><td rowspan="5">• Install the air conditioner in a place that can bear its weight in order to operate more quietly.
• Install the outdoor unit in a place where the air discharged and the operation noise do not annoy your neighbors.
• Do not place any obstacles in front of the outlet of the outdoor unit for fear it affects operation and increases the noise level.</td></tr>
<tr><td rowspan="2">HEATING</td><td>Room temperature
32°F~81°F (0°C~27°C)</td></tr>
<tr><td>Outdoor temperature
-4°F~75°F (20°C~24°C)</td></tr>
<tr><td rowspan="2">COOLING/DRY</td><td>Room temperature
63°F~90°F (17°C~32°C)</td></tr>
<tr><td>Outdoor temperature
5°F~127°F (-15°C~53°C)</td></tr>
<tr><td colspan="2">With the power supply connected, restart the air conditioner after shutdown, or switch it to other mode during operation, and the air conditioner protection device will start. The compressor will resume operation after 3 minutes.</td></tr>
</table>

Features of Protector	Inspection
1. The protective device will trip at following cases. • Stop the appliance and re-start it at once or change other modes during operation, you have to wait 3 minutes before restarting. • After switching on the power circuit breaker and then turn on the air conditioner at once, you have to wait about 20 seconds. 2. In case all operations have stopped, you need. • Press "ON/OFF" button again to restart it. • Set TIMER once again if it has been canceled.	After a long time of operation, the air conditioner should be inspected for the following items. • Abnormal heating of the power supply cord or even a burnt smell. • Abnormal operating noise or vibration. Water leakage from indoor unit. Metal cabinet electrified. • Stop using the air condition er if above problem happened. It is advisable that the air conditioner should be given a detail check-up after using for five years even if none of the above happen.

Features of HEATING mode

Preheat

2-5 minutes are necessary to preheat the indoor heat exchanger at the beginning of "HEATING" operation, lest cold air be discharged.

Defrost

In Heat Mode, the appliance will automatically start a defrost cycle to remove frost from the condenser and restore normal heat exchange performance. This process may take several minutes. During defrosting, the indoor unit fan will temporarily stop operating. Once defrosting is complete, Heat Mode will resume automatically.

FOR HOUSEHOLD USE ONLY
READ AND SAVE THESE INSTRUCTIONS

Specifications

Model No.	DR-HSC001S	DR-HSC002S	DR-HSC003S
Rated Voltage	115V~ 60Hz	115V~ 60Hz	208/230V~ 60Hz
R32	600g/21.16oz	580g/20.46oz	1070g/37.74oz

ASSEMBLING YOUR APPLIANCE

02

Package Contents

Indoor Unit

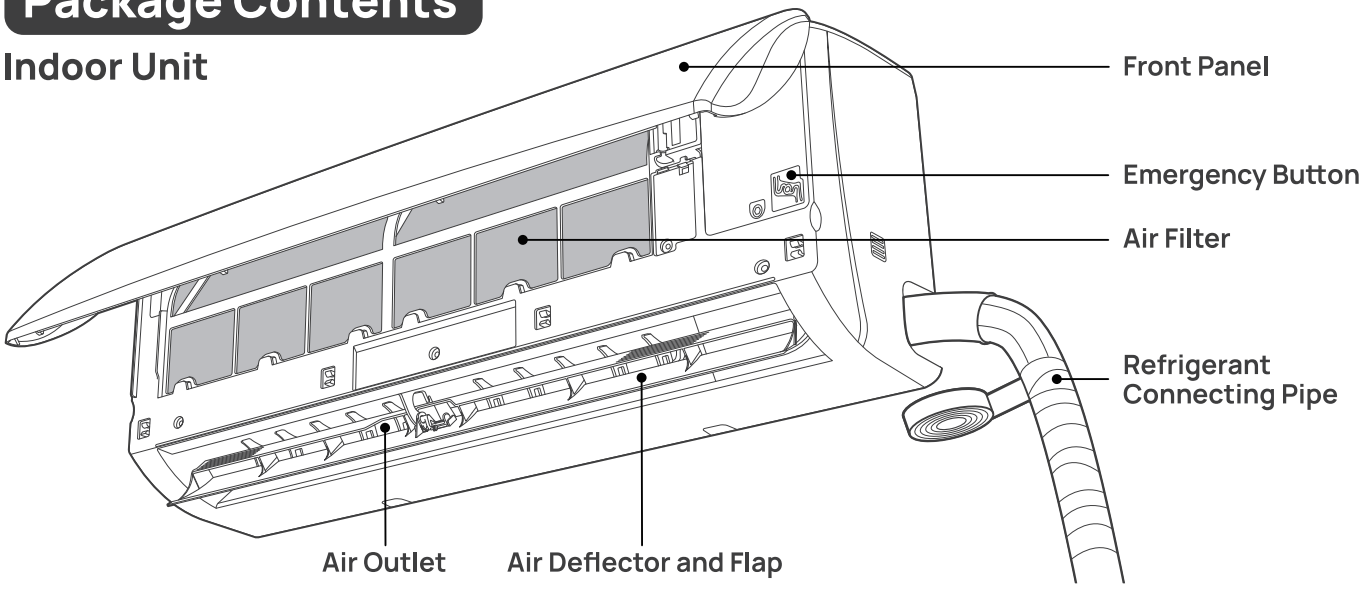

Outdoor Unit

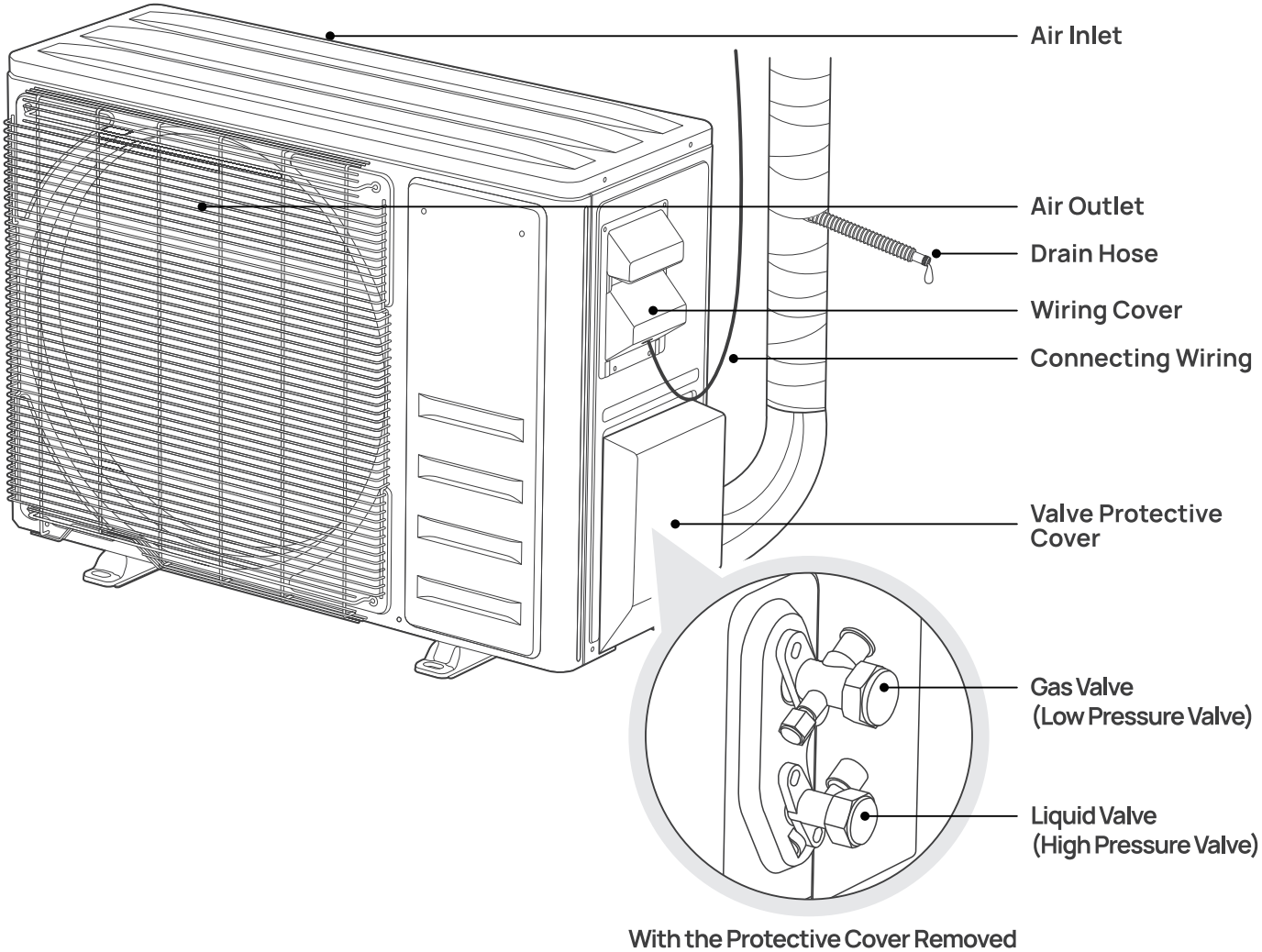

Accessories

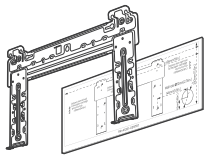
Mounting Plate + Cardboard Template

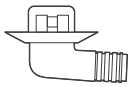
Drain Hoint

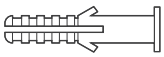
Expansion Bolt


Tapping Screw

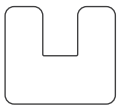
Mounting Foot Pads for the Outdoor Unit

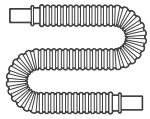
Drain Hose


Connecting Pipe

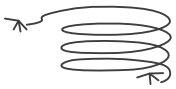
Connecting Wire


Insulation Pipe


Wall Sleeve

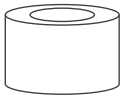
Pipe Tape

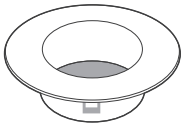
Wall Sleeve Cover


Sealing Putty


Remote Control

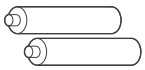
Remote Control Battery

User Manual

Quick Start Guide

Suggested Tools (Not Included)

Refrigeration Tools

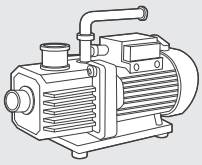
Vacuum Pump

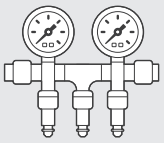
Manifold Gauge Set

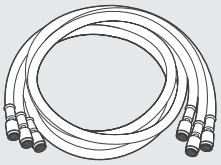
Refrigerant Charging Hoses

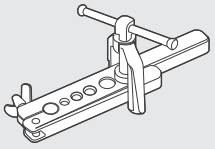
Flaring tool

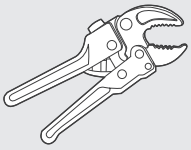
Pipe Cutter

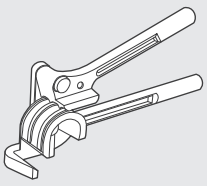
Pipe Bender

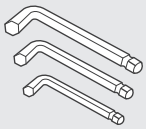
Hex Key Set


Refrigerant Leak Detector

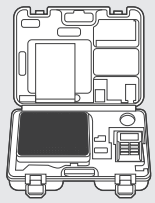
Refrigerant Scale

Installation Tools

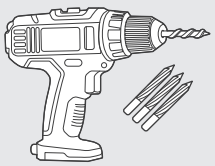
Impact Drill + Drill Bits

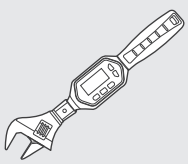
Torque Wrench

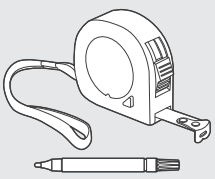
Tape Measure & Marker Pen

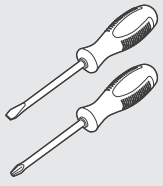
Phillips & Slotted Screw-drivers (Long Handle)


Adjustable Wrenches (2 pcs)

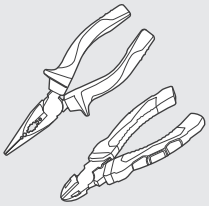

Long Nose Pliers
& Diagonal Pliers



Wire Stripper

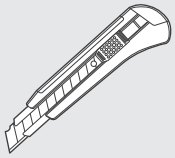

Utility Knife

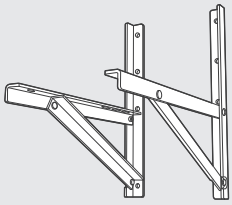

Outdoor Unit
Support

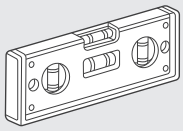

Level

Other Tools

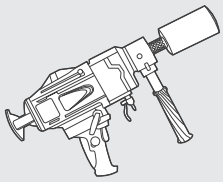

Diamond Core Drill

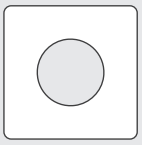

Water & Dust
Collector

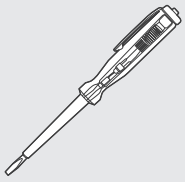

Voltage
Tester



Work Gloves



Multimeter



Safety Glasses

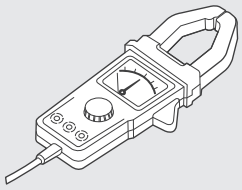

Clamp on Amp
Meter

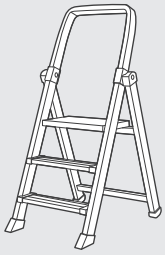

Telescopic
Ladder

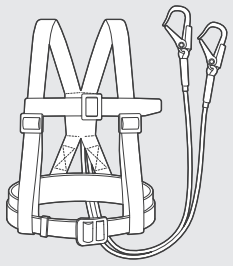

Safety
Harness

Installation Location Overview

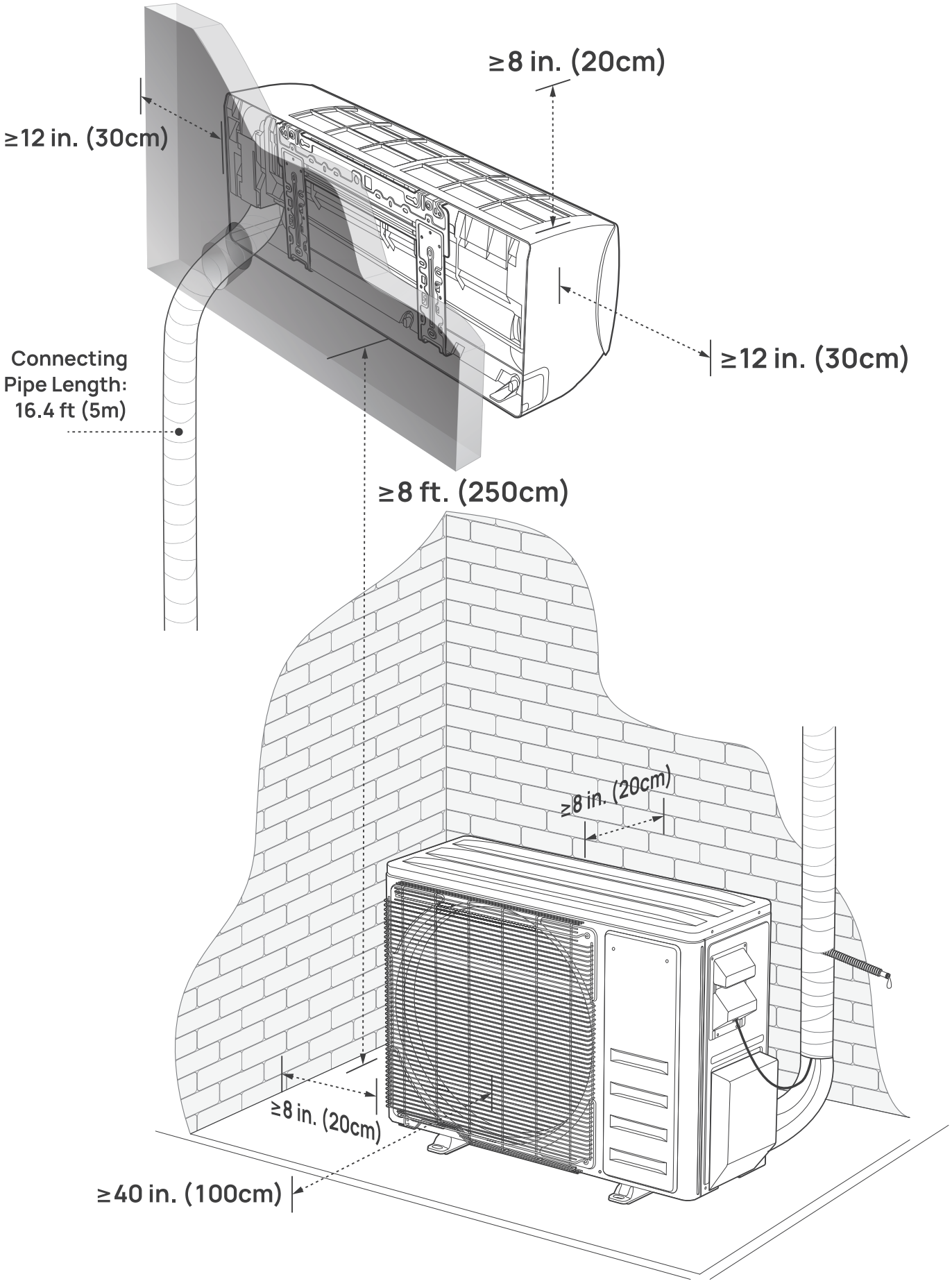

Indoor Unit Installation

1. Select Installation Location

- Maintain at least 8 in. (20cm) clearance from the ceiling.
- Do not install the unit where airflow blows directly onto beds or sofas.
- The standard copper pipe length is 16.4 ft (5 m). Make sure the distance between the indoor and outdoor unit does not exceed this length.
- A wooden wall is preferred. Reinforced concrete walls increase drilling difficulty.

Minimum Indoor Clearances

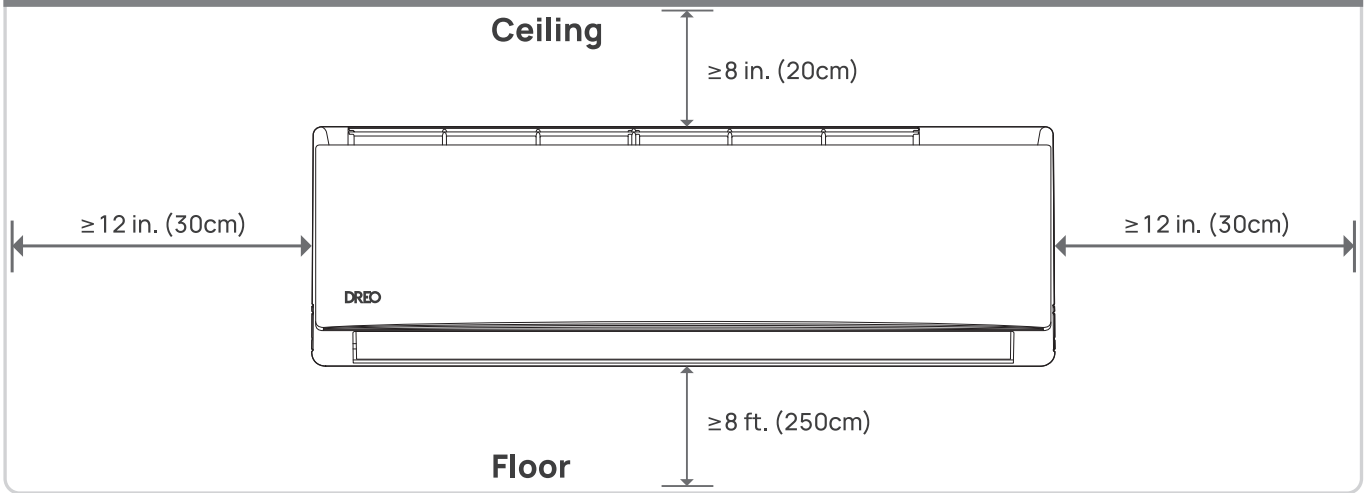

2. Install the Mounting Plate

1) Remove the mounting plate from the back of the indoor unit.
2) Position the cardboard template on the wall and level it using a spirit level.
3) Drill holes based on the cardboard template.
4) Insert expansion bolts, then hang the mounting plate and fix it with screws.

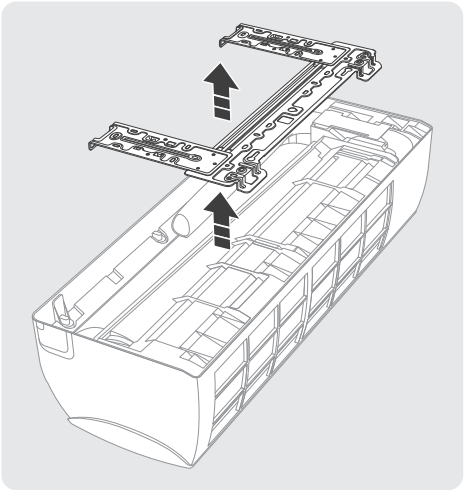

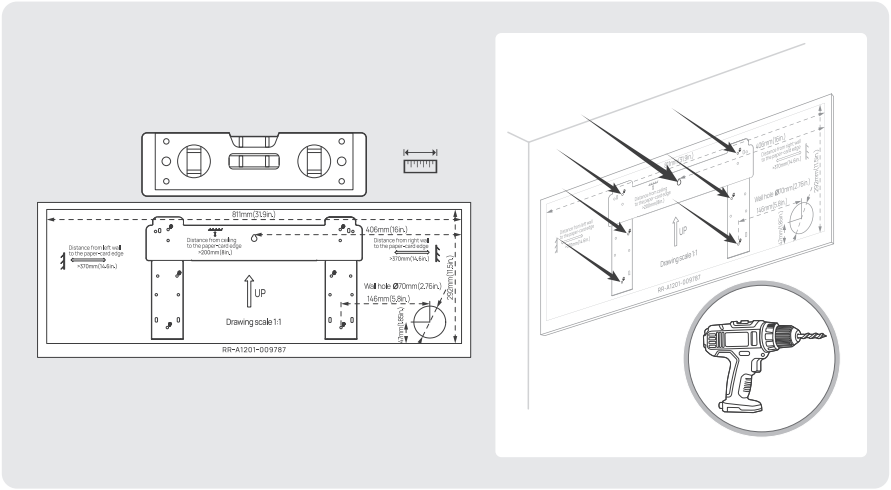

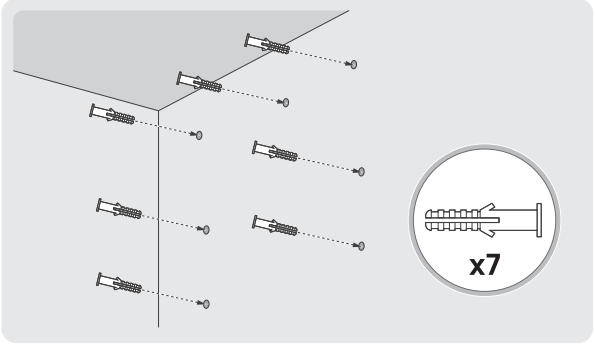

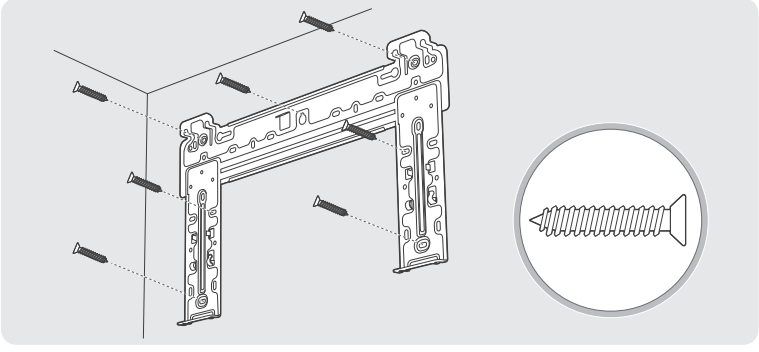

Note: Ensure the mounting plate is level and firmly fixed to the wall.

3. Drill the Wall Hole

1) Determine the hole position based on the cardboard template.
2) Drill a 2.8 in. (70 mm) hole with a slight downward slope toward the outside (approx. 0.2-0.4 in./5-10 mm) for proper drainage.
3) Install a wall sleeve and cover (optional) to protect the piping.

Note: Avoid electrical wiring, plumbing, and other concealed components when drilling.

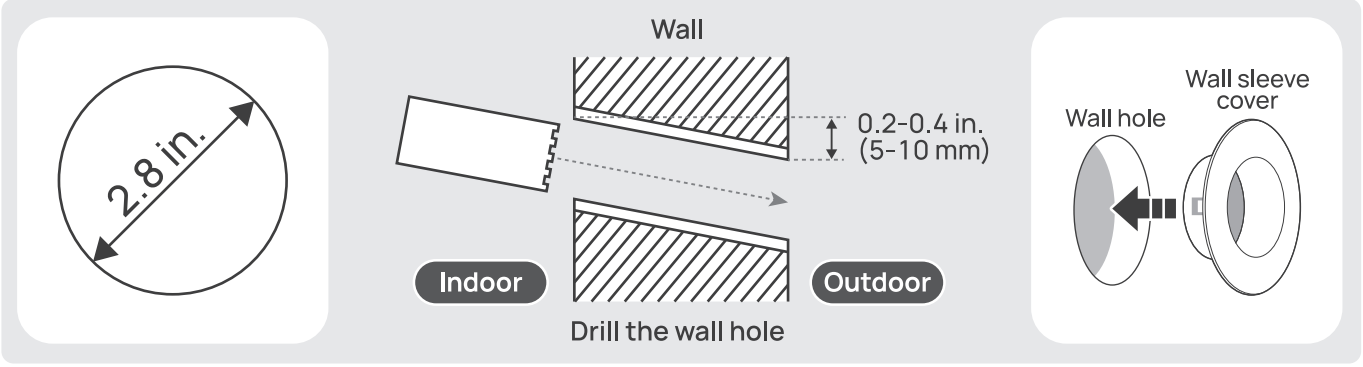

4. Connect Wiring

1) Open the front panel of the indoor unit.
2) Remove the electrical control box cover using a screwdriver to access the terminal block.
3) Route the cable into the control box from the rear of the indoor unit.
4) Loosen the cable clamp.
5) Connect wires to the terminals according to the wiring diagram. Ensure secure connections.
6) Tighten the cable clamp.
7) Reinstall the control box cover and front panel.

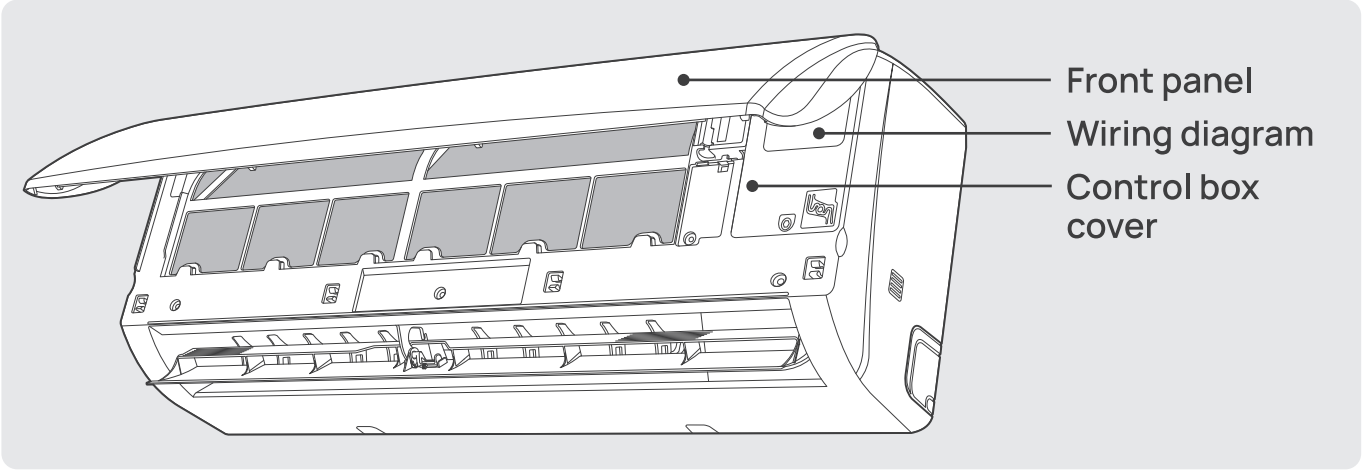

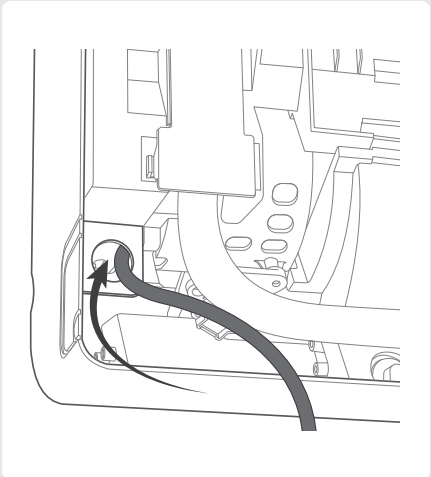

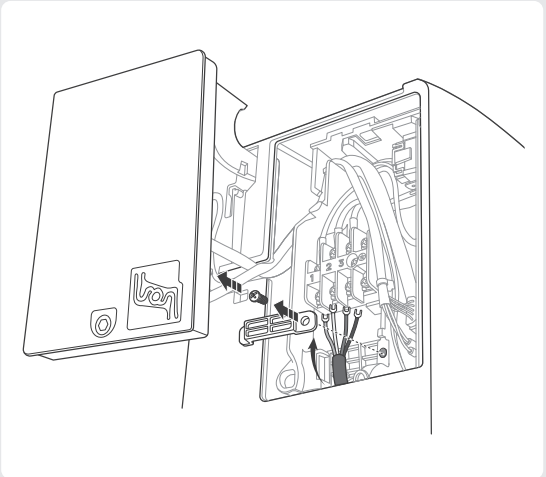

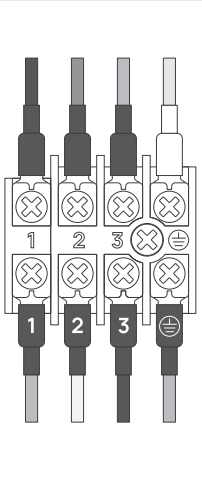

5. Install Refrigerant Pipe

1) According to the wall hole position, select the appropriate piping mode. There are three optional piping modes for indoor units as shown in the figure below: In Piping Mode 1 or Piping Mode 3, a notch should be made by using scissors to cut the plastic sheet of piping outlet and cable outlet on the corresponding side of the indoor unit.

Note: When cutting off the plastic sheet at the outlet, the cut should be trimmed to smooth.

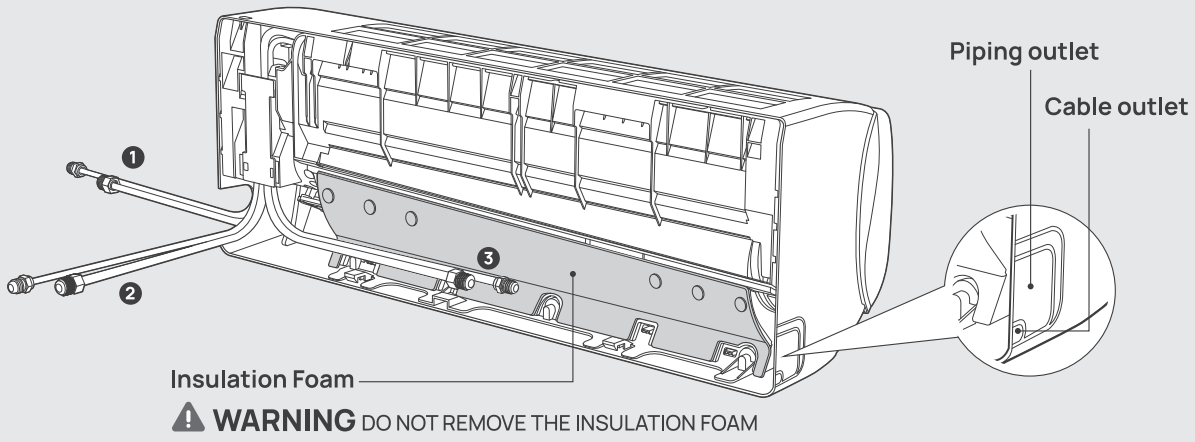

2) Press the pipe port caps to release gas, then remove them.

Note:

- Apply pressure vertically to avoid deforming the pipe.
- Keep gas discharge away from people.
- Gas release indicates no leakage; no gas may indicate a leak.

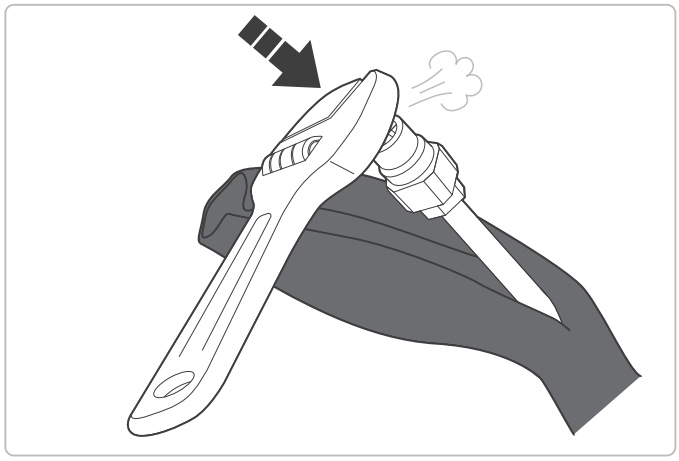

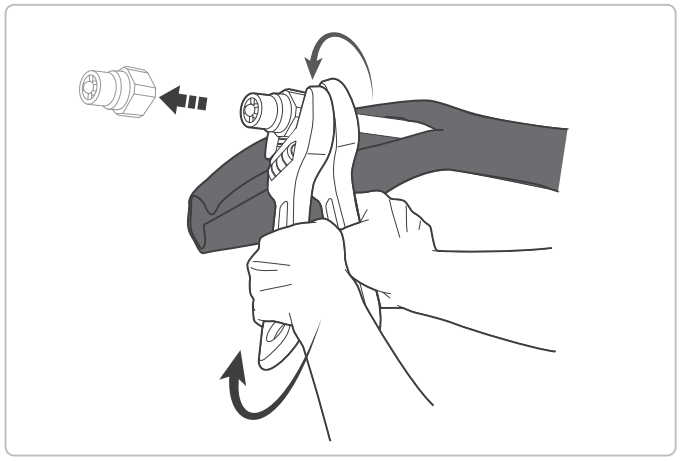

3) Bend the connecting pipes carefully with the ports facing upward as shown below.

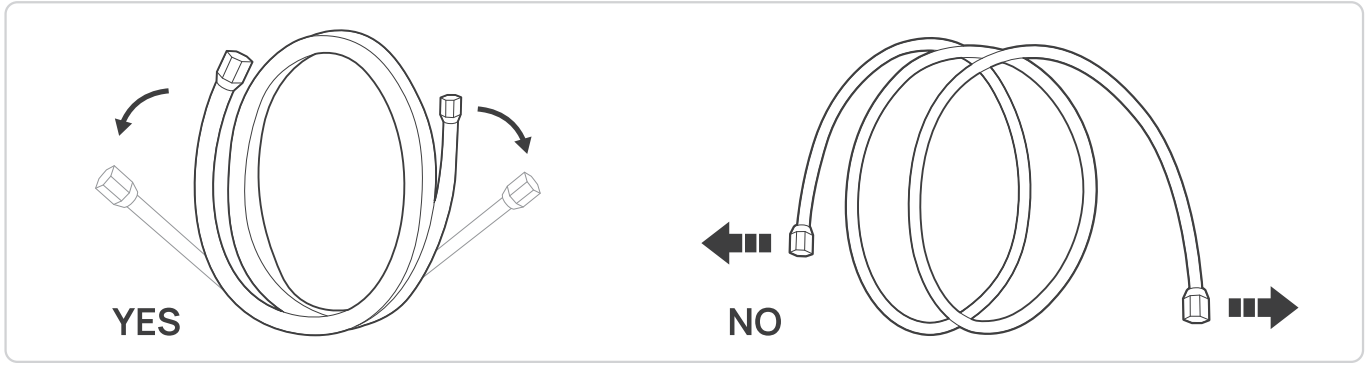

4) Remove the protective rubber plugs from the connecting pipes.
5) Align the flared ends and hand-tighten the flare nut.
6) Hold the indoor unit fitting with a wrench and tighten the flare nut using a torque wrench according to the torque values in the Torque Requirements table below.
7) Wrap the joint with the insulation pipe.

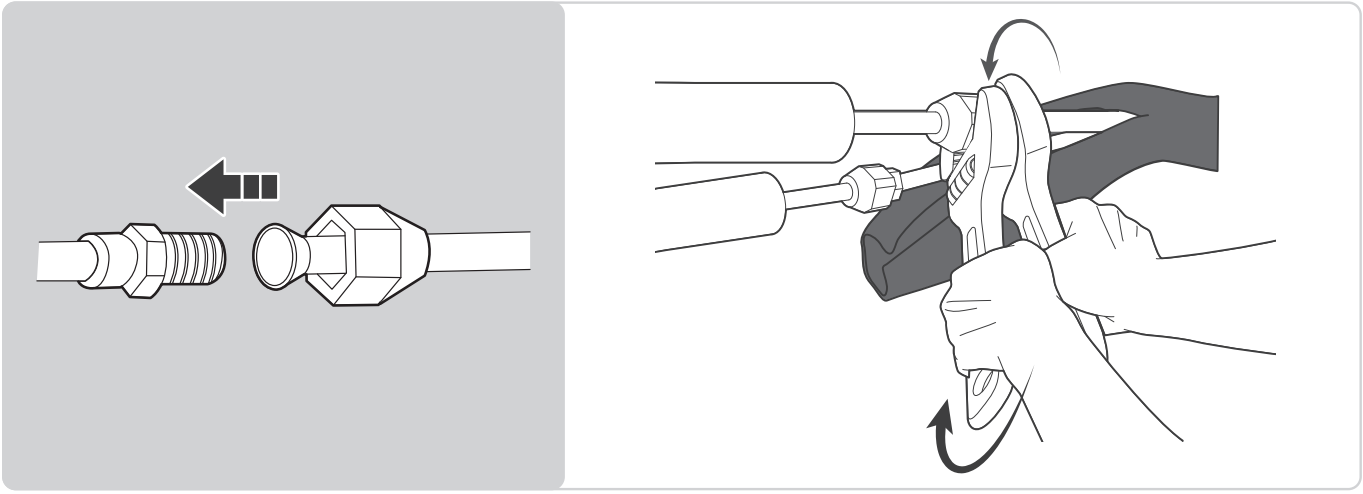

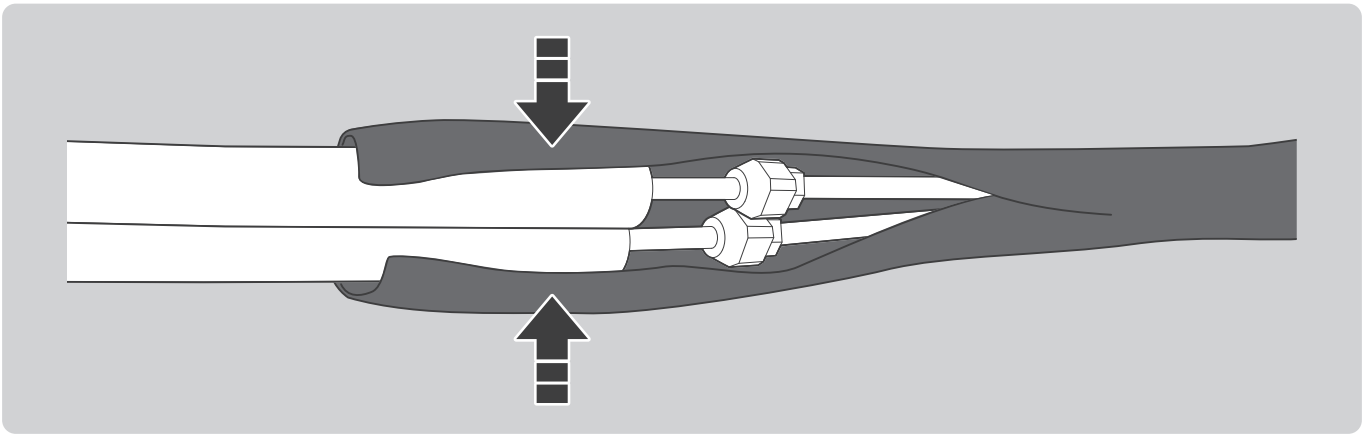

Torque Requirements Table		
Copper Pipe Size (in.)	Recommended Torque (ft-lbs)	Torque Tolerance (ft-lbs)
1/4" (liquid side)	6–8	±0.5
3/8" (gas side)	10–12	±0.5
1/2" (gas side)	15–18	±1

Note: For R32 refrigerant, the connectors should be placed outdoor.

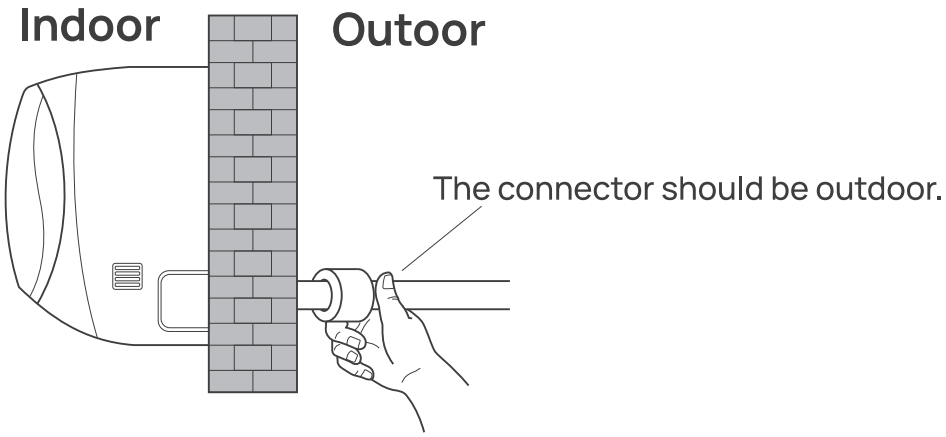

6. Connect Drain Hose

1) Select the drainage port (if applicable)
If both sides are available, use one and seal the other with the rubber attached in one of the ports.

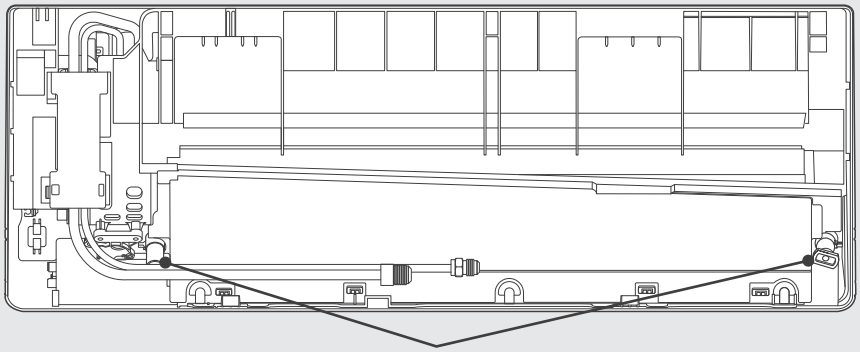

2) Connect the drain hose securely to the drainage port.
3) Seal the joint with teflon tape.

Note:
- Ensure the hose is not kinked or bent.
- Route the hose downward to ensure proper drainage.

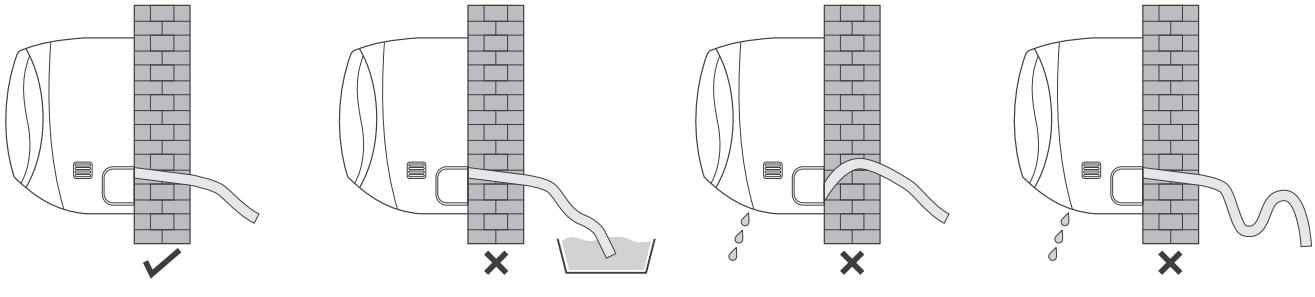

7. Bundle Piping and Cables

Before passing through the wall hole, bundle the refrigerant pipes, wiring, and drain hose together for protection and insulation.

1) Bundle the refrigerant pipes, connecting wires and drain hose as shown below.

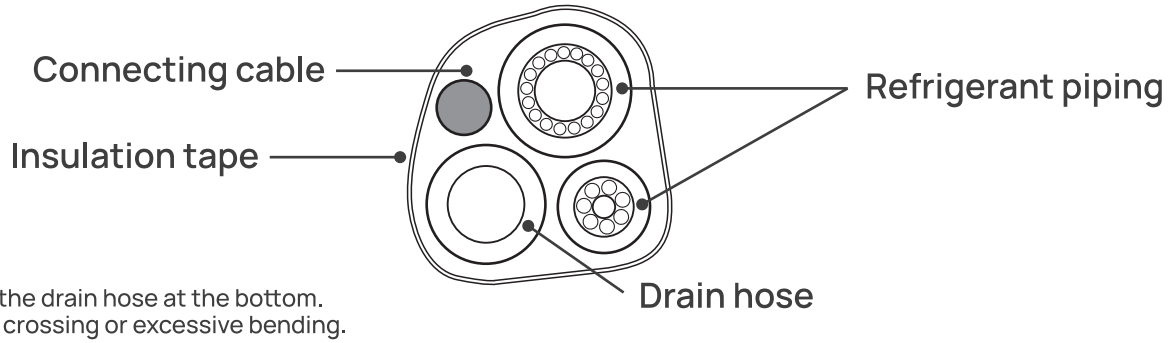

Note:
- Keep the drain hose at the bottom.
- Avoid crossing or excessive bending.

2) Wrap tightly with the insulating tape.

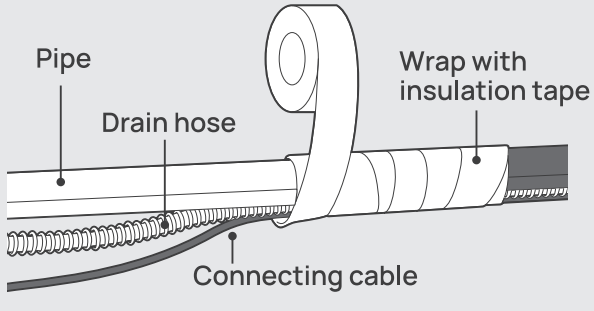

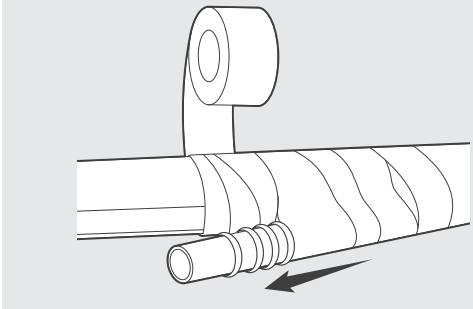

Note:
- Do not leave refrigerant pipes exposed. Start wrapping about 4 in. (10 cm) before the slit in the insulation pipe.
- Keep the drain hose outlet exposed for drainage.

8. Mount Indoor Unit

1) Pass the bundled pipes, wires, and drain hose through the wall hole.
2) Hook the top of the unit onto the mounting plate.
3) Press gently on both sides to ensure it is securely engaged.
4) Push the bottom until the unit is firmly mounted.

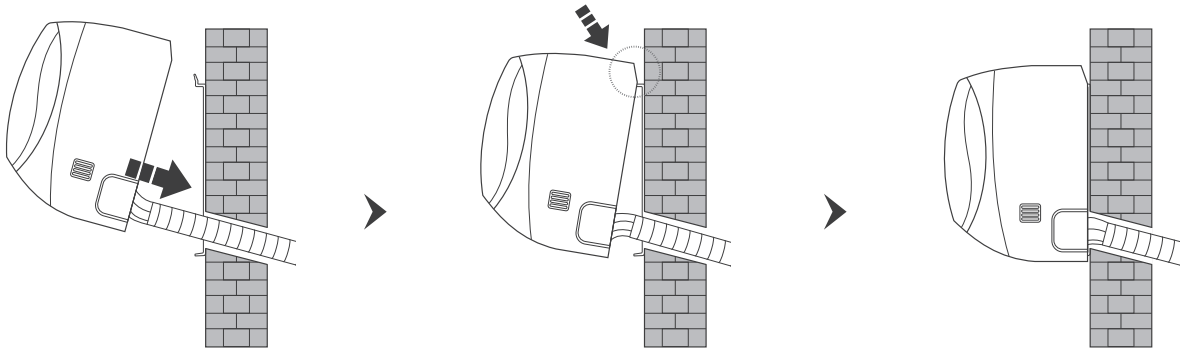

Put pipes in wall hole

Hook it and press down lightly to secure

Check that the unit is firmly mounted

Alternative Installation (for pre-installed piping):

1) Hang the unit on the mounting plate without connecting pipes.
2) Pull the unit slightly away from the wall and use the support bracket to hold it in place.
3) Complete piping, wiring, and drainage connections (Steps 5–7).

Outdoor Unit Installation

1. Select Installation Location

- The air inlet side should be at least 8 in. (20cm) away from walls to ensure proper ventilation.
- The air outlet side should be at least 40 in. (100cm) away from walls to allow proper heat dissipation.
- For ground installation, use a concrete base at least 4 in. (10cm) high to prevent moisture exposure.

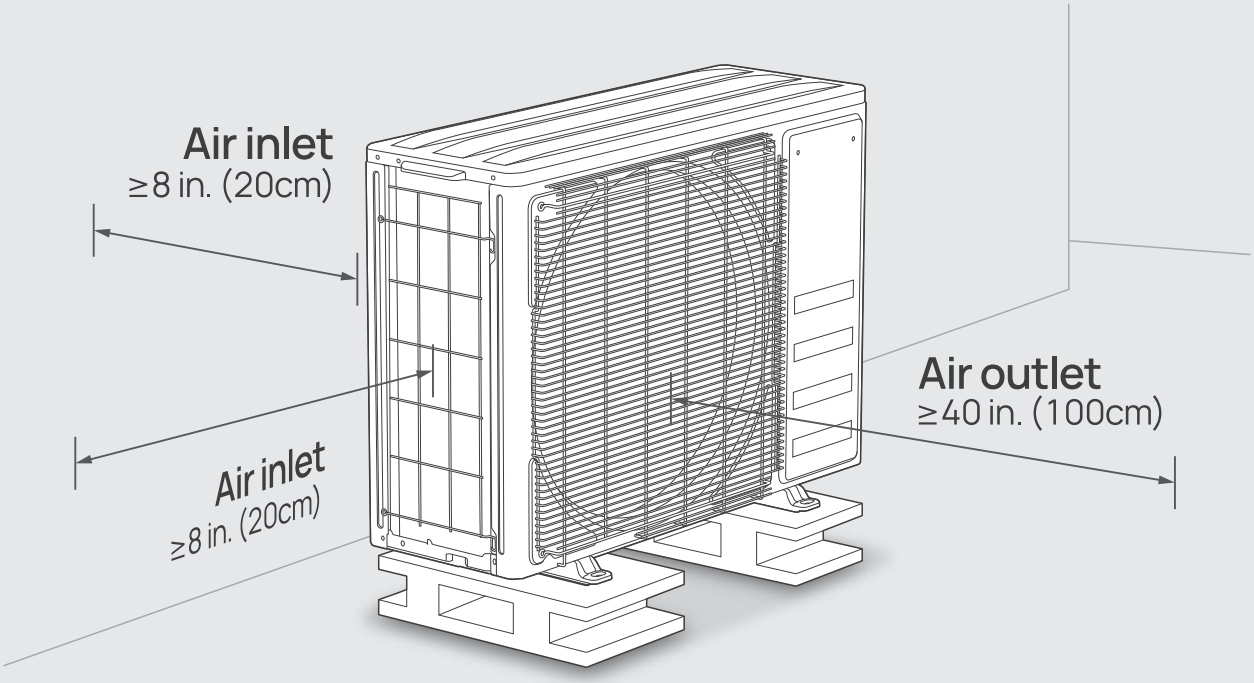

2. Install the Drain Joint

Before securing the outdoor unit, install the drain joint (if applicable).

Note: For units with a built-in base pan designed for drainage, installation of the drain joint is not required.

1) Insert the drain joint into the drain hole at the bottom of the outdoor unit.
2) Attach the drain hose securely to the joint.

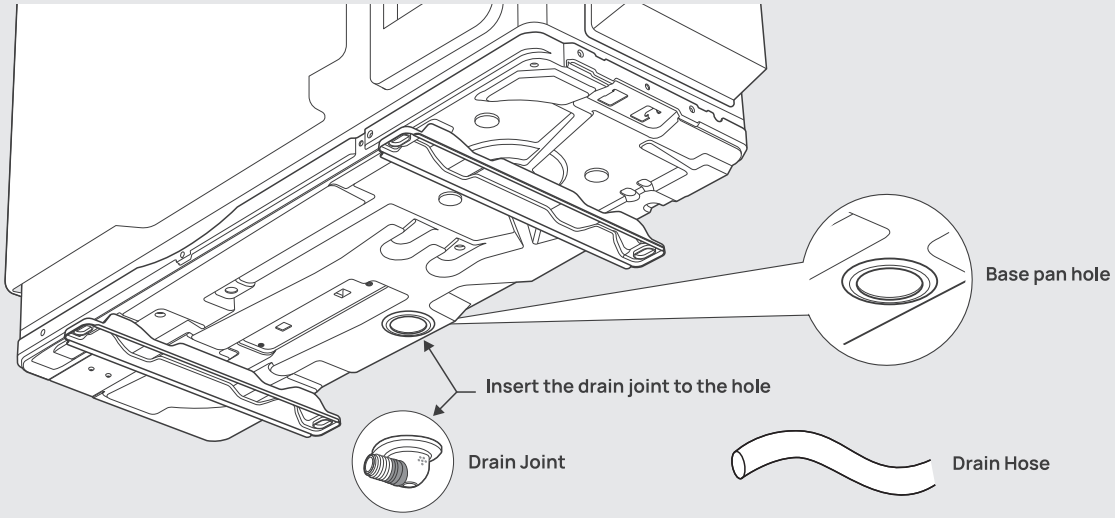

NOTE:

In cold climates, ensure the drain hose is as vertical as possible to ensure swift water drainage. If water drains too slowly it can freeze in the hose and flood the unit.

3. Anchor the Outdoor Unit

1) Mark the mounting hole positions based on the unit's installation dimensions.
2) Drill holes, remove debris, and insert expansion bolts.
3) (Optional) Install rubber pads at the mounting points to reduce vibration and noise.
4) Position the outdoor unit onto the bolts.
5) Secure the unit firmly using a wrench.

Alternative: Wall-Mounted Installation

The outdoor unit may be installed on a wall-mounted bracket.

1) Install the bracket according to the manufacturer's instructions.
2) Secure the unit to the bracket and ensure it is level.
3) The bracket must support at least four times the weight of the outdoor unit.

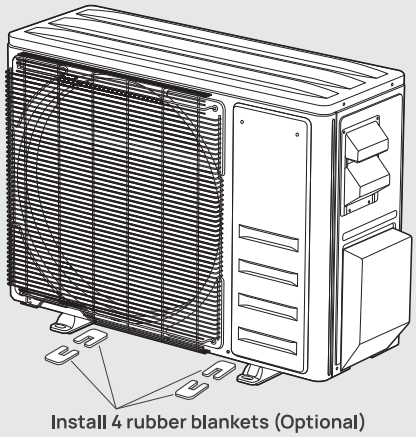

Refrigerant Piping Connection

1. Piping Connection Precautions and Preparations

Note on Pipe Length

Pipe Material		Copper Pipe
Outdoor Pipe Dimension	Liquid side	ϕ1/4 in (6.35 mm)
	Gas side	ϕ3/8 in (9.52 mm)

Model		9/12K	18K
Maxium pipe length (liquid side) L		49.2 ft./15 m	65.6 ft./20 m
Maximum drop height	Drop height between indoor and outdoor unit H	32.8 ft./10 m	49.2 ft./15 m

Allowed Length and Drop Height

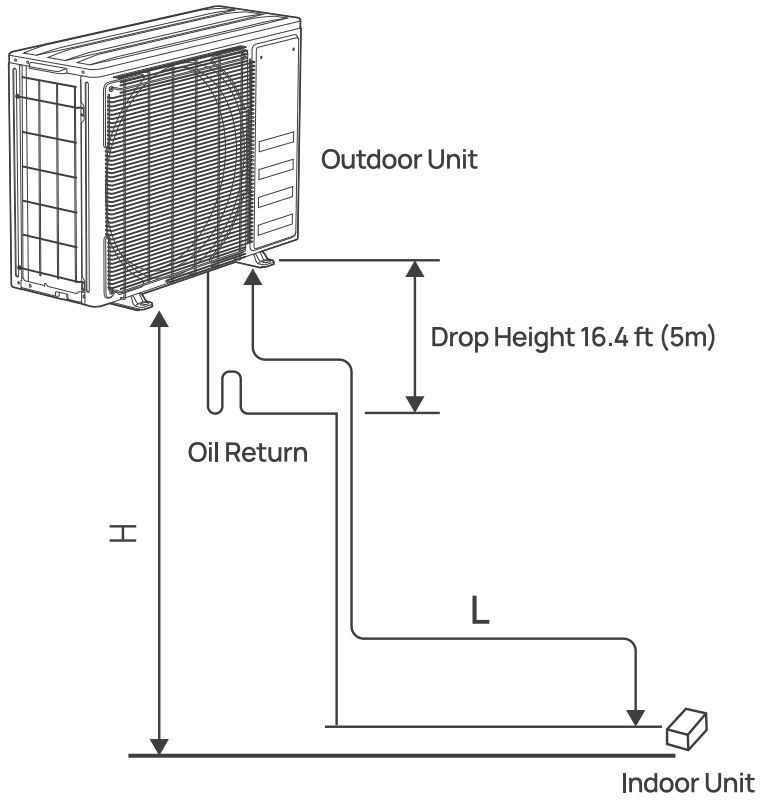

Flaring (optional)

If the pipe length exceeds the distance between the indoor and outdoor units, carefully cut and flare it to ensure a proper fit.

Step 1: Cut the refrigerant pipe off using a pipe cutter.

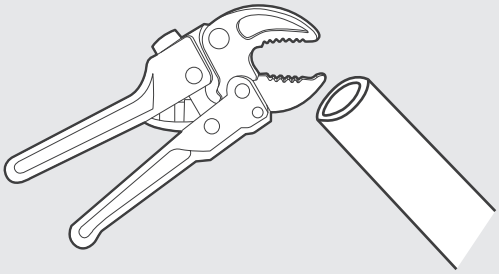

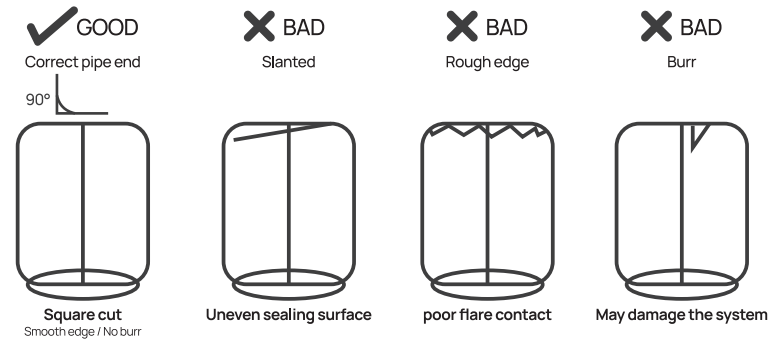

Step 2: Slide the flare nut onto the pipe, then flare the pipe end.

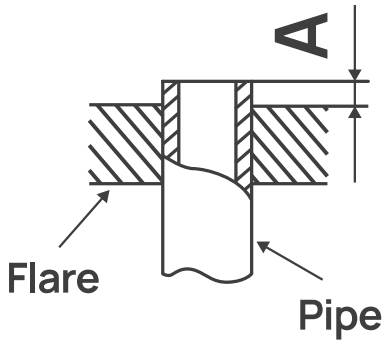

Outside Diameter	A(mm)	
	MAX	MIN
ϕ1/4 in. (6.35 mm)	0.342 in. (8.7 mm)	0.326 in. (8.3 mm)
ϕ3/8 in. (9.52 mm)	0.488 in. (12.4 mm)	0.472 in. (12 mm)
ϕ1/2 in. (12.7 mm)	0.622 in. (15.8 mm)	0.606 in. (15.4 mm)
ϕ5/8 in. (15.8 mm)	0.748 in. (19 mm)	0.732 in. (18.6 mm)
ϕ3/4 in. (19 mm)	0.917 in. (23.3 mm)	0.9 in. (22.9 mm)

Oil Return Bend Installation

When the outdoor unit is below the indoor unit:

Oil return bends are generally not required.

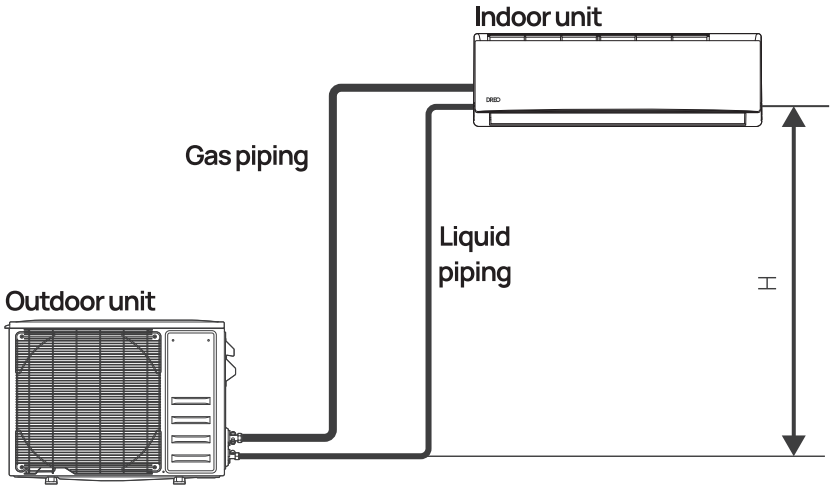

When the outdoor unit is above the indoor unit:

Install oil return bends at the lowest and highest points of the vertical piping to ensure proper oil return to the compressor.

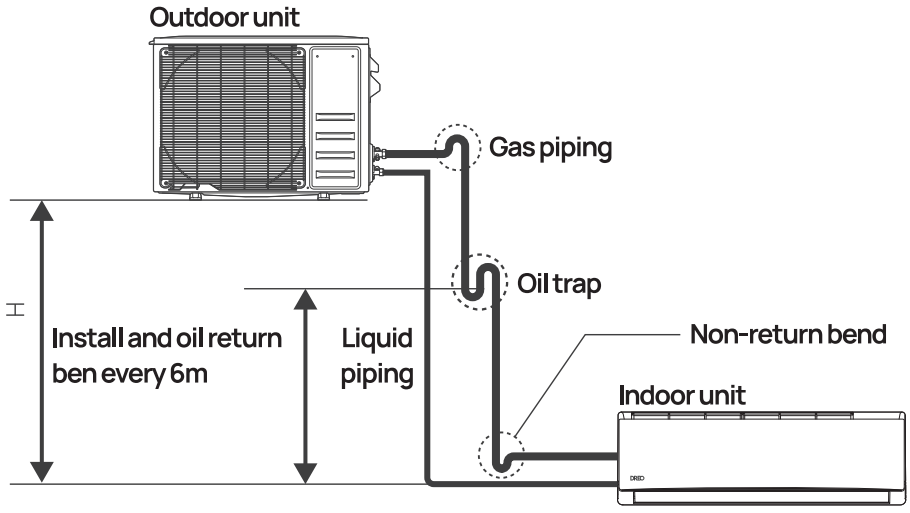

Dimensions for the making of oil return bend are as follows:

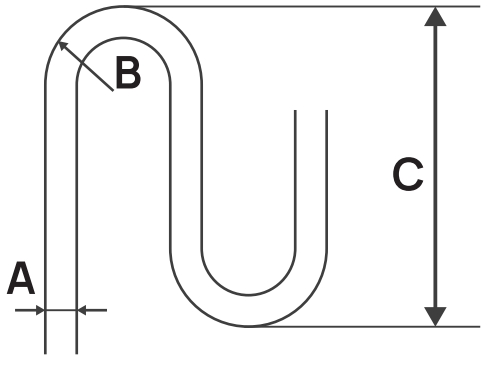

A	B	C
ϕ3/8 in. (9.52 mm)	≥0.787 in. (20 mm)	≤5.9 in. (150 mm)
ϕ1/2 in. (12.7 mm)	≥1.023 in. (26 mm)	≤5.9 in. (150 mm)
ϕ5/8 in. (15.8 mm)	≥1.3 in. (33 mm)	≤5.9 in. (150 mm)

2. Connect Piping to Outdoor Unit

1) Remove the valve cover on the outdoor unit.
2) Remove the protective caps from the valve ports.

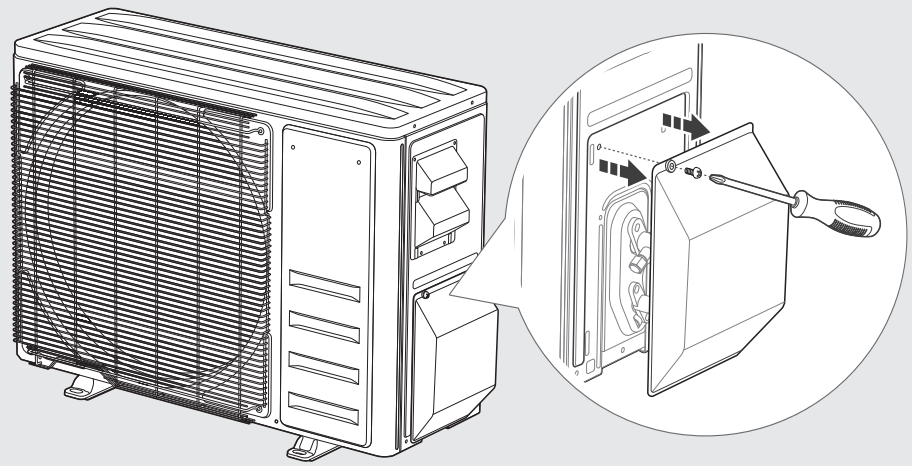

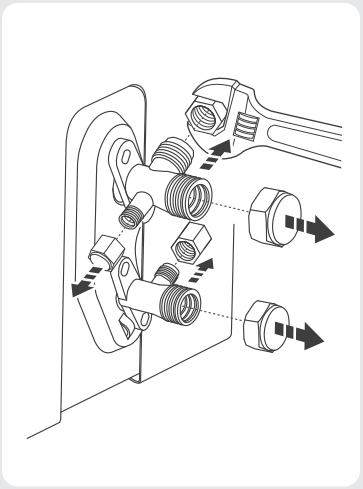

3) Remove the protective rubber plugs from the connecting pipes.
4) Align flared pipe end with each valve and hand-tighten the flare nuts.
5) Use a spanner to hold the valve body. Do not hold the flare nut.
6) Tighten the flare nut with a torque wrench according to the torque values in the Torque Requirements table below.

USE SPANNER TO GRIP MAIN BODY OF VALVE
Torque from tightening the flare nut can snap off other parts of valve.

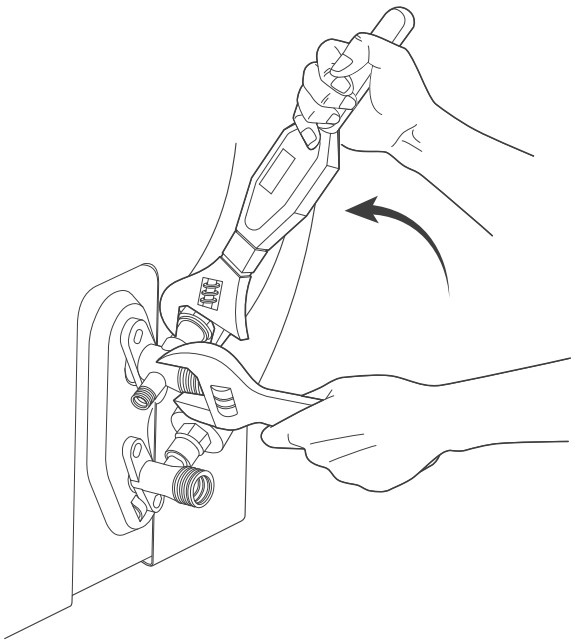

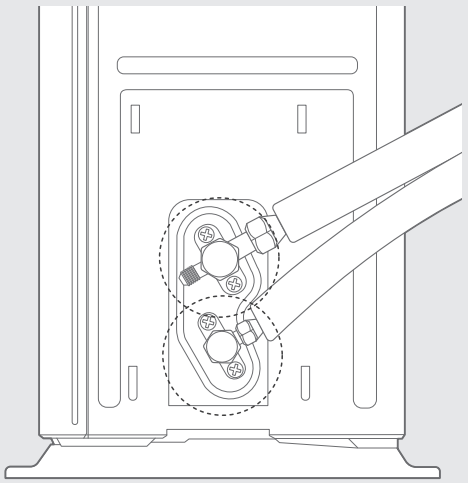

Connect all pipes

Torque Requirements Table		
Copper Pipe Size (in.)	Recommended Torque (ft-lbs)	Torque Tolerance (ft-lbs)
1/4" (liquid side)	6–8	±0.5
3/8" (gas side)	10–12	±0.5
1/2" (gas side)	15–18	±1

DO NOT USE EXCESSIVE TORQUE
Excessive torque may crack the flare nut or damage the piping. Always follow the specified torque values.

Air Evacuation

Precautions

- Air and moisture in the refrigerant circuit can cause abnormal pressure, resulting in reduced performance, equipment damage, or personal injury.
- Always evacuate the indoor unit and connecting pipes using a vacuum pump and manifold gauge to remove non-condensable gases and moisture.
- Evacuation must be performed during initial installation and when the unit is relocated. Failure to follow proper procedures may result in system malfunction.
- Before evacuation, ensure that all refrigerant piping between the indoor and outdoor units is properly connected and tightened.

Evacuation Procedure

1) Remove the protective caps from the service port, low-pressure valve, and high-pressure valve on the outdoor unit using a wrench.
2) Connect the manifold gauge low-pressure hose to the service port of the outdoor unit.
3) Connect the center hose of the manifold gauge to the vacuum pump.
4) Open the low-pressure valve on the manifold gauge and keep the high-pressure valve closed.
5) Start the vacuum pump to evacuate the system.

Note:

- Ensure the vacuum pump connector properly depresses the valve core to allow evacuation.
- Evacuate for at least 30 minutes, or until the pressure reaches –0.1 MPa (–76 cmHg).

6) Close the low-pressure valve on the manifold gauge and stop the vacuum pump.
7) Perform a vacuum hold test for at least 10 minutes. Ensure the pressure rise does not exceed 500 microns.
8) Disconnect the hose. Slightly open the low-pressure valve (approx. 1/4 turn) using a hex wrench to allow a small amount of refrigerant into the system. After 2-3 seconds, close the valve.
9) Check all indoor and outdoor connections for leaks.

   Soapy Water Method
   Apply soapy water or liquid detergent to all joints using a soft brush. Bubbles indicate a leak.

   Leak Detector Method
   Use a leak detector according to the manufacturer's instructions.

   If there is any leakage, contact DREO Customer Support immediately.

10) Fully open both the low-pressure and high-pressure valves using a hex wrench.
11) Reinstall all protective caps.
12) Reinstall the valve cover.

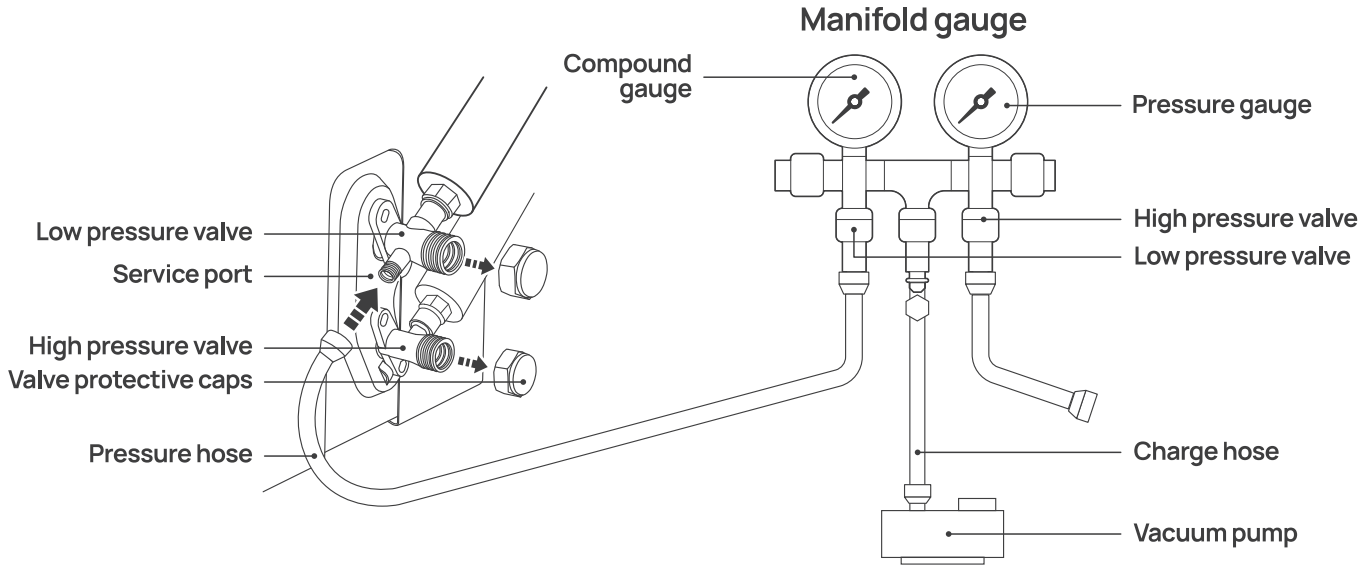

Recommended Vacuum Pump Models

Brand & Model	Key Specifications	Compatible Units
VIVOHOME 4.5CFM	110V/60Hz 1/3 HP 150 microns R32 explosion-proof	9K / 12K / 18K wall-mounted AC units
BACOENG 4CFM	110V Single-stage 150 microns 1/4" + 1/2" ports	9K / 12K / 18K wall-mounted AC units
NAVAC NP4DP	4CFM 110V Anti oil-backflow design Gas ballast valve	9K–24K wall-mounted AC units
Robinair 15500	4CFM 110V Industrial-grade R32 certified	9K–18K wall-mounted AC units

Note: DO NOT use automotive vacuum pumps, undersized 1–2 CFM mini pumps, or oil-free diaphragm vacuum pumps.

Additional Refrigerant Charge

The system is pre-charged for 25 ft (7.5 m) of piping.
For piping longer than this length, additional refrigerant must be added based on pipe diameter and length.

Inverter Models Capacity (Btu/h)	9K/12K	18K
Length of pipe with standard charge	25 ft./7.5 m	25 ft./7.5 m
Maximum distance between indoor and outdoor unit	49 ft./15m	65 ft./20 m
Additional refrigerant charge	0.11 oz/ft. (10g/m)	0.11 oz/ft. (10g/m)
Max. diff. in level between indoor and outdoor unit	33 ft./10 m	49 ft./15 m
Type of refrigerant	R32	

Refrigerant Charge Label

Fill out the label using indelible ink:
① Factory refrigerant charge (see nameplate).
② Additional refrigerant added on site.
① + ② Total refrigerant charge.
Affix the completed label near the manufacturer's label on the outdoor unit.

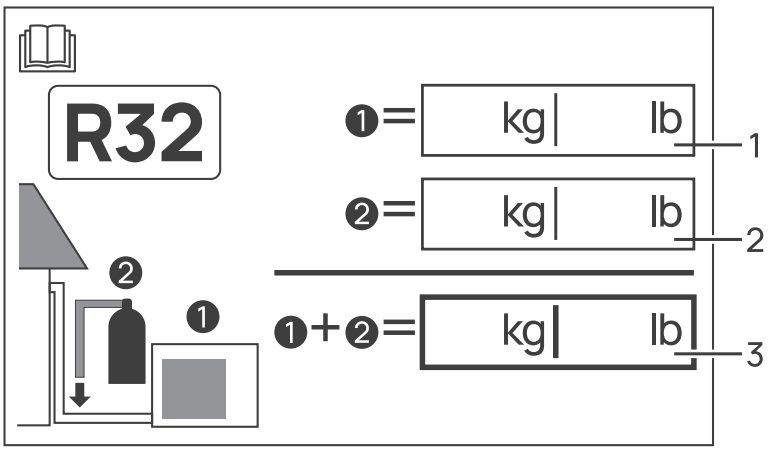

Electric Wiring

Precautions

- All wiring must be carried out in accordance with the wiring diagram inside the outdoor unit wire cover.
- Always turn off the main power supply before performing any electrical or wiring work.
- Electrical connection from the home electrical panel to the outdoor unit is not included and must be completed by a qualified electrician or licensed HVAC professional in accordance with local regulations.
- Circuit breaker, outdoor disconnect box, conduit/whip, grounding materials, and field wiring are not included.
- The included connecting wiring is intended only for connecting the indoor and outdoor units.

Install Wiring

1. Use a Phillips screwdriver to remove the wiring cover. Gently press and pull it downward to detach.
2. Loosen and remove the cable clamp.
3. Connect the wires to the corresponding terminals according to the wiring diagram on the wiring cover. Ensure all connections are secure.
4. Reinstall the cable clamp and wiring cover.

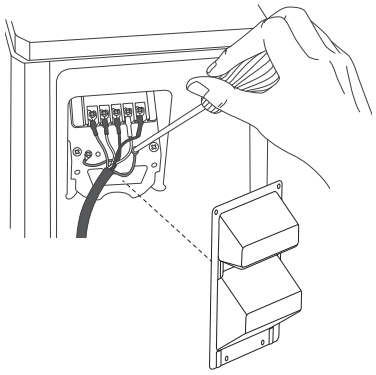

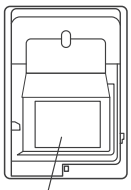

Wiring diagram

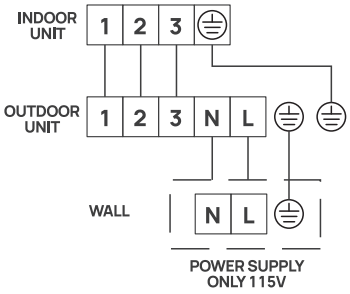

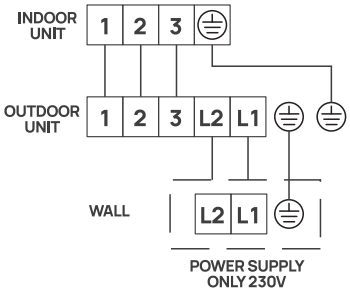

Test Operation

Pre-Test Inspection

Description	Inspection Method
Electrical Safety Check	• Verify that the power supply voltage meets the specifications. • Check for incorrect or missing connections among power wires, signal wires, and grounding wires. • Ensure that grounding resistance and insulation resistance meet requirements.
Installation Safety Check	• Ensure the drain hose is properly routed and drains smoothly. • Confirm that refrigerant pipe connections are properly installed and secured. • Verify that the indoor unit, outdoor unit, and mounting plate are securely installed. • Ensure all service valves are fully open. • Confirm that no foreign objects or tools remain inside the unit. • Ensure the indoor unit air inlet grille and front panel are properly installed.
Refrigerant Leak Check	• Inspect all potential leak points, including: pipe joints, outdoor unit valve connections, valve cores, brazed joints. • Soapy Water Method: Apply soapy water to all joints and observe for bubbles. No bubbles indicate no leakage. • Leak Detector Method: Use a professional leak detector according to the manufacturer's instructions. Note: - Check each point for at least 3 minutes. **- If there is any leakage, contact DREO Customer Support immediately.** - After testing, insulate exposed indoor pipe joints with insulation material and tape.

Test Run Procedure

1. Turn on the power supply.
2. Press the Power button on the remote control to start the unit.
3. Press the Mode button to switch between Cool and Heat modes.

Set the unit as follows for testing:

- Cool Mode: Set to the lowest temperature
- Heat Mode: Set to the highest temperature

4. Run the unit for approximately 8 minutes in each mode, and check the following:
   - Whether outlet air temperature changes appropriately
   - Whether water drains properly from the drain hose
   - Whether louvers and deflectors operate correctly
5. Continue running the unit for at least 30 minutes to observe stable operation.
6. After successful testing, restore normal settings and turn off the unit.
7. Instruct the user to read the manual and demonstrate basic operation, maintenance, and accessory usage.

Note:

If the ambient temperature is outside the operating range specified in the Operation Instructions section, the unit may not run in Cool or Heat mode.

In this case, open the front panel and use the emergency operation button to start the unit.

CONNECTING TO YOUR APPLIANCE

03

Before connecting the appliance to your mobile device, please scan the QR code on the left or go to the app store and search **“DREO”**, then select and download the app.

Download on the App Store

GET IT ON Google Play

Look for "Mini Split Smart Air Conditioner 321S / 342S / 363S" when connecting your new appliance.

You can use the **DREO** app to connect your appliance to **Amazon Alexa** or **Google Home**. Please follow the in-app instructions to set up your voice assistant.
NOTE: You must create a DREO account to access voice assistants.



Launch DREO and sign in or create an account by following in-app instructions. 1

2 **Enable Bluetooth on your mobile device and plug in your appliance.**

5s for WiFi
5 seconds

Hold 5s for WiFi **for 5 seconds to start WiFi connection settings.**
(Tip: The WiFi icon will keep flashing when pairing.) 3

4 Tap + **Add Device** and select **Mini Split Smart Air Conditioner 321S / 342S / 363S.**



Follow in-app instructions to complete the WiFi connection. 5

6 **You're now ready to control the appliance on your app.**

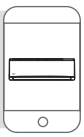

(Tip: To restart connection settings, hold 5s for WiFi again for 5 seconds)

KNOWING YOUR APPLIANCE

04

LED Display



Remote Control

Buttons

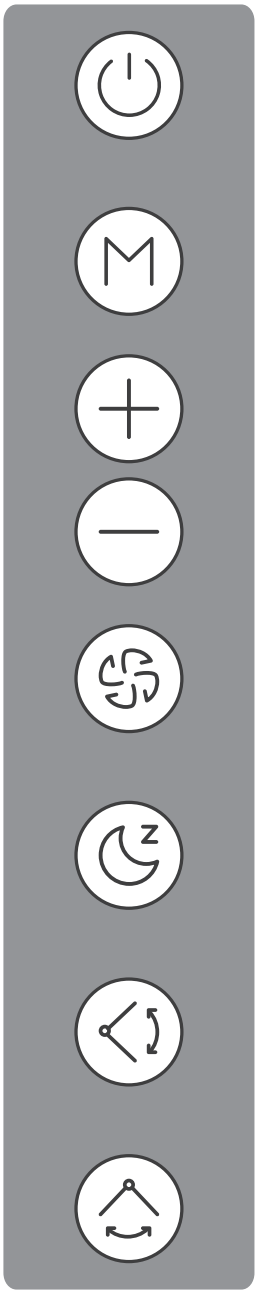

Power
- Power on/off.
- Long press for 5 seconds to reset factory settings.

Mode
Switch between Cool/Fan/Dry (dehumidify)/Heat modes.

Settings Adjustment
Increase/Decrease temperature/timer hour.

Fan Speed
Adjust airflow speed between Low/Mid/High/Auto/Quiet/Turbo.

Sleep Function
Turn Sleep Function on/off.

Vertical Swing
Set the air discharge louvers to oscillate up and down.

Horizontal Swing
Set the air discharge louvers to oscillate left and right.

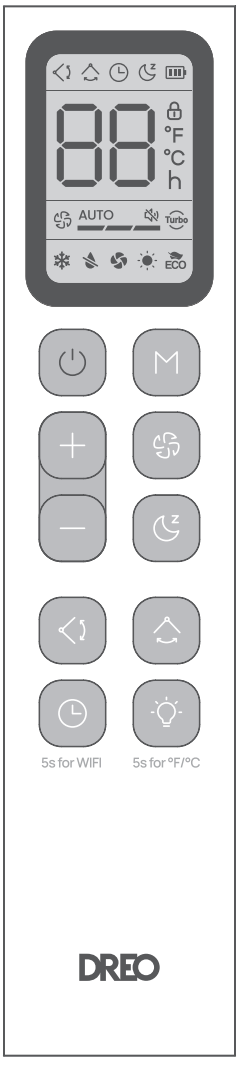

Timer
- Set a timer (0-12h) to turn the unit on/off.
- Long press for 5 seconds to start network settings and device pairing.

LED Display Light On/Off
- Turn the LED display on/off.
- Long press for 5 seconds to switch between °F / °C.

Child Lock
Press and 5s for WIFI to activate / deactivate the Child Lock function.

ECO Function
Press and to activate / deactivate ECO function.

Self-Cleaning Function
When the unit is off, press and to activate / deactivate the self-cleaning function.

Indicators

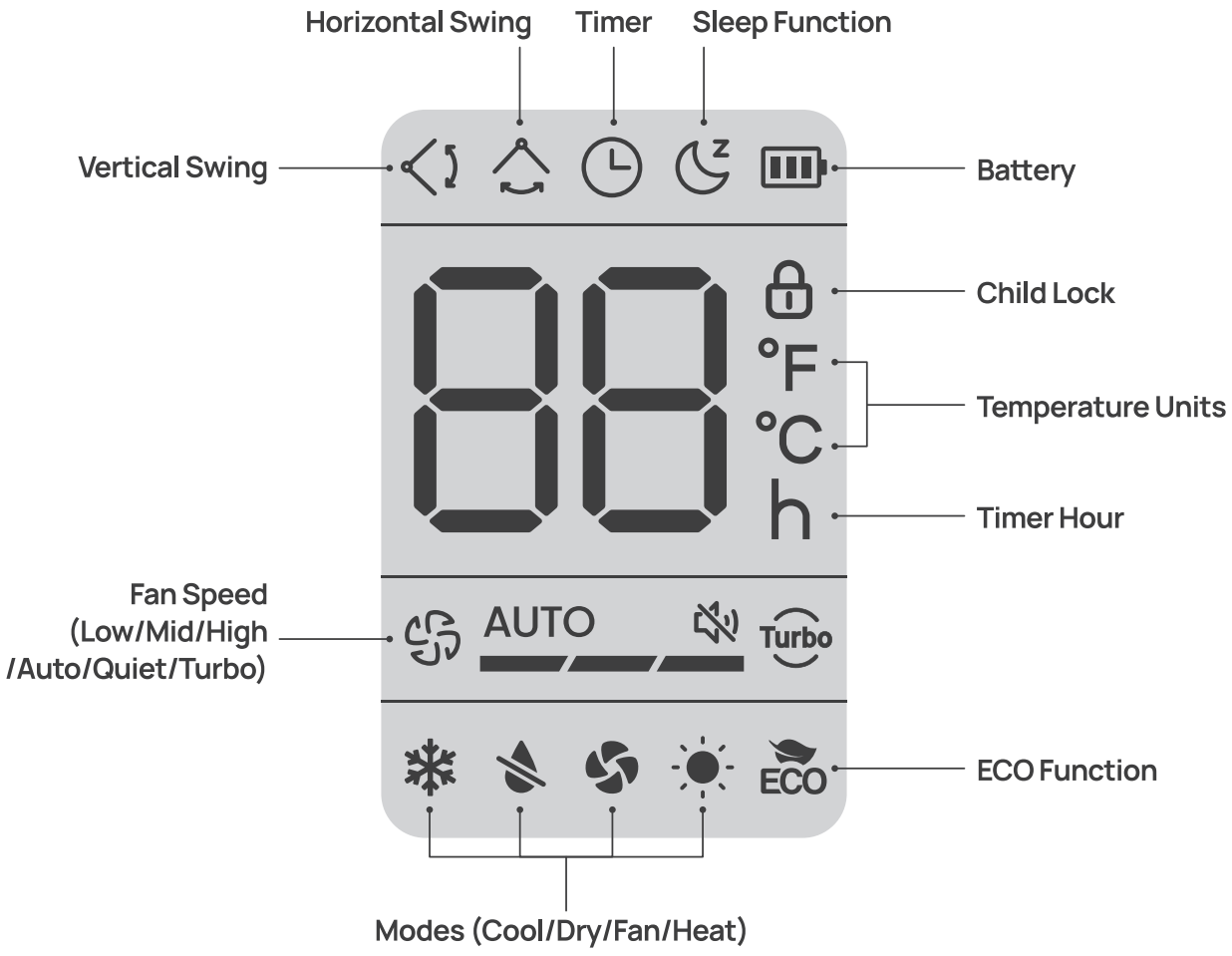

USING YOUR APPLIANCE

05

Working Modes

Cool Mode

- Fast cooling with customizable temperature and fan speed.
- You can select your target room temperature by pressing + or — button on the remote control.
- The fan speed can be customized by pressing and choosing between: Low/Mid/High/Auto/Quiet/Turbo.

Heat Mode

- Fast heating with customizable temperature and fan speed.
- You can select your target room temperature by pressing + or — button on the remote control.
- The fan speed can be customized by pressing and choosing between: Low/Mid/High/Auto/Quiet/Turbo.
- In Heat Mode, the appliance will automatically start a defrost cycle to remove frost from the condenser and restore normal heat exchange performance. This process may take several minutes. During defrosting, the indoor unit fan will temporarily stop operating. Once defrosting is complete, Heat Mode will resume automatically.

Fan Mode

- The appliance blows air into the room.
- Choose between 6 different fan settings (Low, Mid, High, Auto, Quiet, Turbo).
- Temperature cannot be adjusted in Fan Mode.

Dry Mode (Dehumidifying)

- Reduces room relative humidity.
- Keep windows and doors closed for the best dehumidifying effect.
- Fan speed changes automatically and cannot be adjusted.

ECO Function

- The appliance automatically sets the operation to save energy.
- The ECO function is available in both Cool Mode and Heat Mode.

Sleep Function

- Comfortable cooling or heating.
- The Sleep function is available in both Cool Mode and Heat Mode.

Additional Features



Child Lock

Press and 5s for WiFi to activate / deactivate the Child Lock function. When activated, the remote control display will show , and all the buttons on the remote control will be locked.

Self-Cleaning

When the unit is off, press and to activate / deactivate the self-cleaning function.
This function helps carry away the accumulated dirt, bacteria, etc. from the indoor evaporator.

Memory

If the appliance is turned OFF or disconnected from power, it will operate under the previous settings (including working modes and swing) when it is turned ON again.

Firmware Update

Check the firmware version on the DREO app and update regularly for the appliance to work more efficiently.

Display will show "UP" during the update process. Do not operate until the update is completed.

Battery Replacement

Your air conditioner may come with two batteries (2 x AAA, 1.5V). Put the batteries in the remote control before use.

1. Slide the back from the remote control downward, exposing the battery compartment.
2. Insert the batteries, paying attention to match up the (+) and (-) ends of the batteries with the symbols inside the battery compartment.
3. Slide the battery cover back into place.

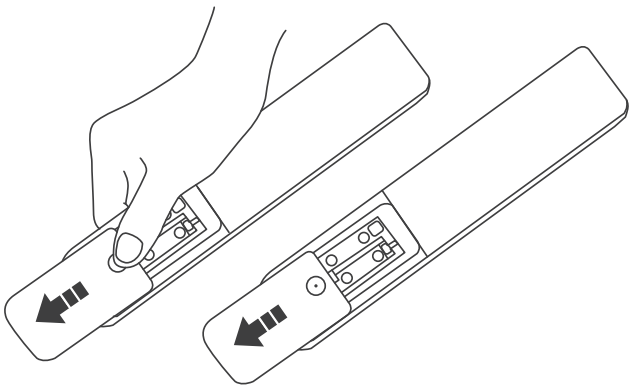

WARNING

- Replace with new batteries of the same type when replacement is required.
- Remove the batteries when the remote control is unused for a long period of time.
- Do not attempt to destroy or dismantle the batteries.
- Do not dispose of the batteries in a fire as batteries may explode or leak.
- Chemical burn hazard. Keep batteries away from children.
- Do not mix old and new batteries. Do not mix alkaline, standard (carbon-zinc) , or rechargeable (ni-cad, nimh, etc.) batteries.
- Always purchase the correct size and grade of battery most suitable for the intended use.
- Replace all batteries of a set at the same time.
- Clean the battery contacts and also those of the device prior to battery installation.
- Remove used batteries promptly.

CLEANING AND MAINTENANCE

06

WARNING

- Turn off the unit and disconnect the power supply for at least 5 minutes before cleaning.
- Do not rinse or flush the air conditioner with water under any circumstances.
- Do not use volatile liquids (e.g., thinner or gasoline), as they may damage the unit. Clean with a soft dry cloth or a cloth dampened with a mild detergent.
- Clean the air filter regularly to prevent dust buildup, which can reduce performance. In dusty environments, increase the cleaning frequency as needed.
- After removing the filter, avoid touching the indoor unit fins to prevent injury or damage.

Clean the Indoor Unit



Wipe the unit surface with a soft cloth. For best results, use a cloth dampened with water and wrung dry.

Tip: Clean regularly to keep the air conditioner looking clean and well-maintained.

Clean the Filter (after 600 hours of operation)

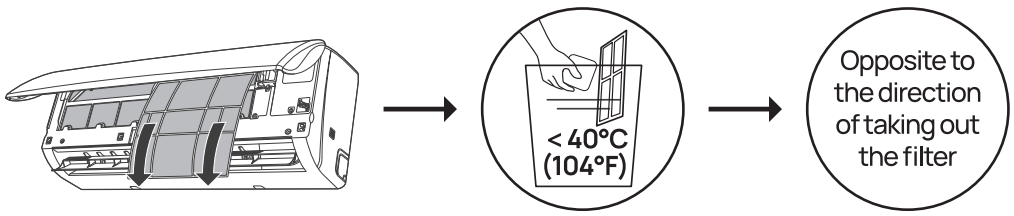

Take out the filter from the indoor unit.	Wash the filter with mild soapy water and allow it to air dry completely.	Replace the filter.

Tip: Clean the filter promptly when dust buildup is visible to maintain clean air and ensure efficient operation of the air conditioner.

Service and Maintenance

- If the air conditioner will not be used for an extended period, remove the batteries from the remote control and disconnect the power supply.
- Before restarting after a long period of inactivity:

1. Clean the unit and filter.
2. Check that the air inlets and outlets of both indoor and outdoor units are not blocked.
3. Ensure the drain hose is unobstructed.
4. Reinstall the remote control batteries and restore power.

TROUBLESHOOTING 07

Problem	Possible Causes
The appliance does not operate	Incorrect wiring connection.
	Power failure.
	Damaged indoor/outdoor fan motor.
	Faulty compressor thermomagnetic circuit breaker.
	Faulty protective device or blown fuse.
	Loose connections or disconnected power terminal.
	The unit has stopped temporarily to protect itself.
	Voltage is outside the allowable range.
	TIMER-ON function is activated and the set time has not been reached.
	Faulty electronic control board.
Strange odor	Dirty air filter.
Noise of running water	Refrigerant flowing inside the system (normal operation) .
Fine mist from the air outlet	This may occur when the room air becomes very cold, such as in Cool or Dry mode.
Insufficient airflow	Incorrect temperature setting.
	Blocked air inlet or outlet.
	Dirty air filter.
	Fan speed set to low.
	Additional heat sources in the room.
	Insufficient refrigerant.
The appliance does not respond to commands	Remote control is too far from the indoor unit.
	Remote control batteries are depleted.
	Obstacles blocking the signal between the remote control and the receiver.
The display is off	The display light is turned off.
	Power failure.

Abnormal operation or safety risk	Faulty electronic control board.
	Faulty fuse or switch.
	Water or foreign objects inside the unit.
	Overheated cables.
	Strong or unusual odors from the unit.
	In this case, turn off the unit immediately and disconnect the power supply.

Error Code	
E1	Indoor room temperature sensor failure.
E2	Indoor pipe temperature sensor failure.
E3	Outdoor pipe temperature sensor failure.
E4	Refrigerant system leakage or malfunction.
E6	Indoor fan motor malfunction.
E7	Outdoor ambient temperature sensor failure.
E0	Indoor-outdoor communication failure.
E8	Outdoor discharge temperature sensor failure.
E9	Outdoor IPM module failure.
ER	Outdoor current detect failure.
EE	Outdoor PCB EEPROM failure.
EF	Outdoor fan motor malfunction.
EH	Outdoor suction temperature sensor failure.

DREO CUSTOMER CARE 08

12-MONTH LIMITED WARRANTY

What is Covered

DREO warrants to you that your product will be free from original defects in materials and workmanship for a period of twelve (12) months from the date of your purchase, when you use your product for intended purposes in accordance with this User Manual.

Please retain your proof of purchase. If you do not retain your proof of purchase, your warranty will start two (2) months from the date of manufacture printed on your product label.

What is Not Covered

This limited warranty only applies to the original purchaser of your product and is non-transferable. This warranty is only valid if your product is used in the country in which you originally purchased it. In addition, this warranty will not apply, and DREO will not be liable for any costs, damages, or repairs, in connection with any of the following:

- Accidents or use of your product with inappropriate force;
- Damage or destruction caused by wrong voltage or unstable electric current;
- Normal wear and tear;
- Careless operation or handling, misuse, abuse, neglect, and/or failure to maintain or use your product in accordance with this User Manual;
- Any partially or completely altered, modified and/or dismantled products;
- Reduction in battery discharge time due to battery age or use (as applicable);
- Products with altered or removed serial numbers;
- Clearing any blockages from the product;
- Purchases from retailers and distributors not authorized by DREO to sell this product;
- Defects caused by or resulting from damages from shipping or handling by any third party not authorized by DREO to ship or handle your product; or
- Defects caused by or resulting from repairs, service, improper maintenance, or alteration to your product or any of its components by anyone other than a repair person authorized by DREO.

Any service and customer support that DREO provides to you under this limited warranty will not extend the duration of this limited warranty.

Warranty Limitations and Exclusions

ANY IMPLIED WARRANTIES RELATING TO YOUR PRODUCT, INCLUDING BUT NOT LIMITED TO THE WARRANTY OF MERCHANTABILITY AND THE WARRANTY OF FITNESS FOR A PARTICULAR PURPOSE, ARE LIMITED TO THE DURATION OF THE LIMITED WARRANTY SET FORTH ABOVE AND ARE OTHERWISE DISCLAIMED.

THIS LIMITED WARRANTY SHALL BE THE SOLE REMEDY OF THE PURCHASER OR USER OF THE PRODUCT, AND DREO SHALL NOT BE LIABLE FOR AN ALLEGEDLY DEFECTIVE OR DAMAGED PRODUCT EXCEPT TO REPAIR OR REPLACE IT IN ACCORDANCE WITH THIS LIMITED WARRANTY. DREO WILL NOT BE LIABLE FOR SPECIAL, INCIDENTAL, INDIRECT, CONTINGENT, OR CONSEQUENTIAL DAMAGES OR LOSSES OF ANY NATURE THAT YOU MAY INCUR IN CONNECTION WITH YOUR PURCHASE OR USE OF YOUR PRODUCT.

Some jurisdictions do not allow limitations on how long an implied warranty lasts or the exclusion or limitation of incidental or consequential damages, so the above limitations or exclusions may not apply to you. This limited warranty gives you specific legal rights, and you also may have other rights which vary from jurisdiction to jurisdiction.

Limited Remedies

If your product fails because of an original defect in material and/or workmanship during the warranty period, DREO will repair or replace (in DREO's sole discretion) your product.

To obtain warranty service on your product, contact us at support@dreo.com or at (888) 290-1688 (available from Monday - Friday, 9:00 AM - 5:00 PM PST/PDT) for further instructions.

IN THE EVENT OF AN ORIGINAL DEFECT IN MATERIAL AND/OR WORKMANSHIP, TO THE EXTENT PERMITTED BY LAW, THE REMEDIES SET FORTH IMMEDIATELY ABOVE ARE YOUR SOLE AND EXCLUSIVE REMEDIES.

FCC Statement

This device complies with Part 15 of the FCC Rules.Operation is subject to the following two conditions: (1) this device may not cause harmful interference, and (2) this device must accept any interference received, including interference that may cause undesired operation.

Any changes or modifications not expressly approved by the party responsible for compliance could void the user's authority to operate the equipment.

NOTE: This equipment has been tested and found to comply with the limits for a Class B digital device, pursuant to Part 15 of the FCC Rules. These limits are designed to provide reasonable protection against harmful interference in a residential installation. This equipment generates, uses and can radiate radio frequency energy and, if not installed and used in accordance with the instructions, may cause harmful interference to radio communications. However, there is no guarantee that interference will not occur in a particular installation.

If this equipment does cause harmful interference to radio or television reception, which can be determined by turning the equipment off and on, the user is encouraged to try to correct the interference by one or more of the following measures:

- Reorient or relocate the receiving antenna.
- Increase the separation between the equipment and receiver.
- Connect the equipment into an outlet on a circuit different from that to which the receiver is connected.
- Consult the dealer or an experienced radio/TV technician for help.

This equipment complies with FCC radiation exposure limits set forth for an uncontrolled environment. This equipment should be installed and operated with a minimum distance of 20cm between the radiator & your body. This transmitter must not be co-located or operating in conjunction with any other antenna or transmitter.

Rev_EN_1.0

Reach out to us, it's easy!

(888) 290-1688 (Mon - Fri, 9:00 am-5:00 pm PST/PDT)

support@dreo.com

www.dreo.com

DREO PTE. LTD.

112 ROBINSON ROAD, #03-01, ROBINSON 112, SINGAPORE 068902

www.dreo.com

Reach out to us, it's easy!

Contact us to get expert support.

support@dreo.com

(888) 290-1688

www.dreo.com

Mon - Fri, 9:00 am-5:00 pm PST/PDT