Installation Guide

⚠ For installation help, missing or replacement parts - **PLEASE CONTACT KARRAN FIRST**

1-866-452-7726
info@karran.com

Register Online:

www.karran.com/productregistration

Tools you may need:

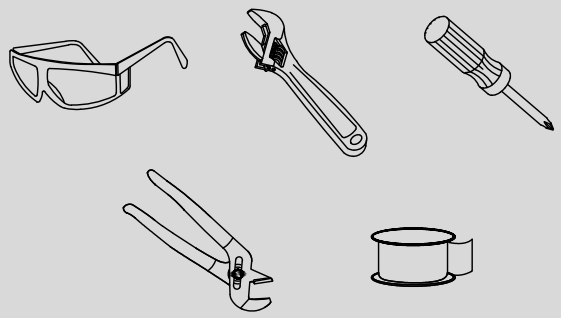

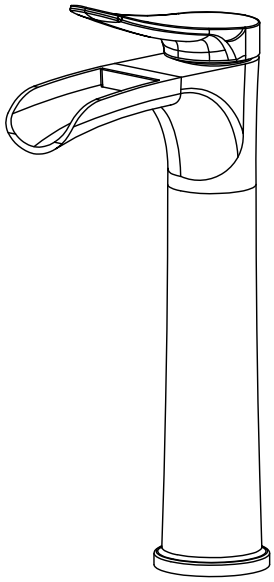

Image is for reference only

KASSEL™ SINGLE HANDLE VESSEL BATHROOM FAUCET

MODEL	FINISH
KBF402MB	Matte Black
KBF402SFSS	Spot Free Stainless Steel
KBF402SFBG	Spot Free Brushed Gold

Save this instruction sheet for future reference

We reserve the right to update product installation instructions without notice. Please visit karran.com for the most current installation instructions.

REV. 11/04/2026

⚠ TIPS FOR REMOVING YOUR OLD FAUCET

Turn your water supply off before removing your old faucet. Open the faucet handle to relieve any water pressure and to make sure that complete water shut off has been achieved.

Care & Maintenance

To clean, rinse with clean water and dry with a soft cloth. Do not clean with soaps, polish, abrasives or harsh cleaners, they can cause damage to the finish. Do not use any cloth with a coarse finish. Clean the aerator when needed.

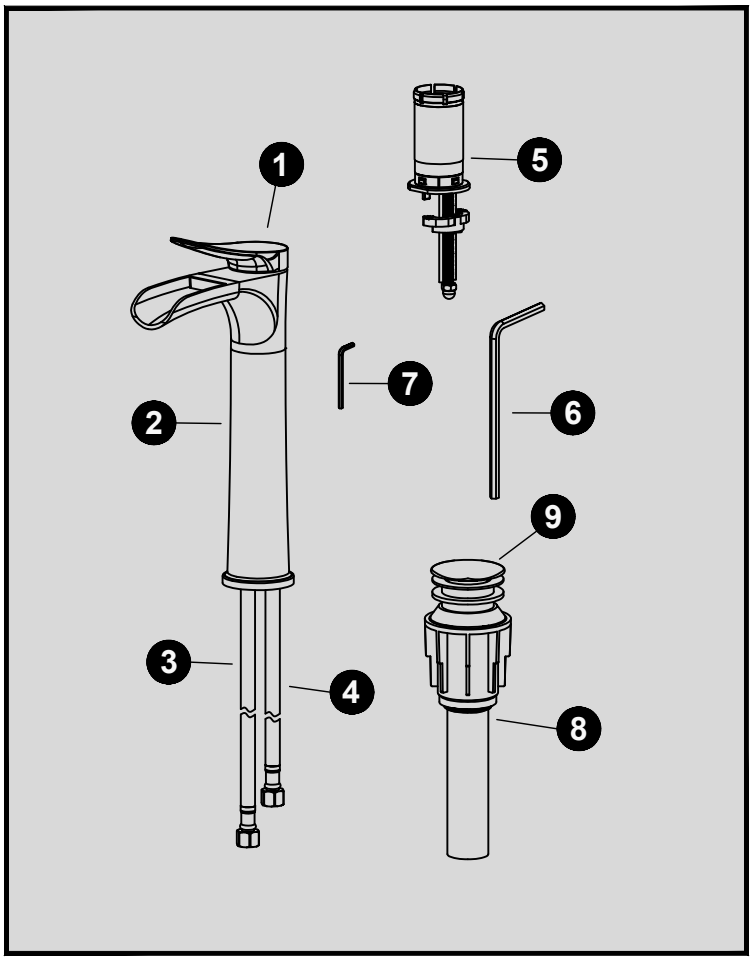

Parts List

1. Handle
2. Faucet Body
3. Hot Waterline
4. Cold Waterline
5. Mounting Bracket
6. Hex Wrench (5mm)
7. Hex Wrench (2.5mm)
8. Pop-up Drain
9. Pop-up Cover

Technical Drawing

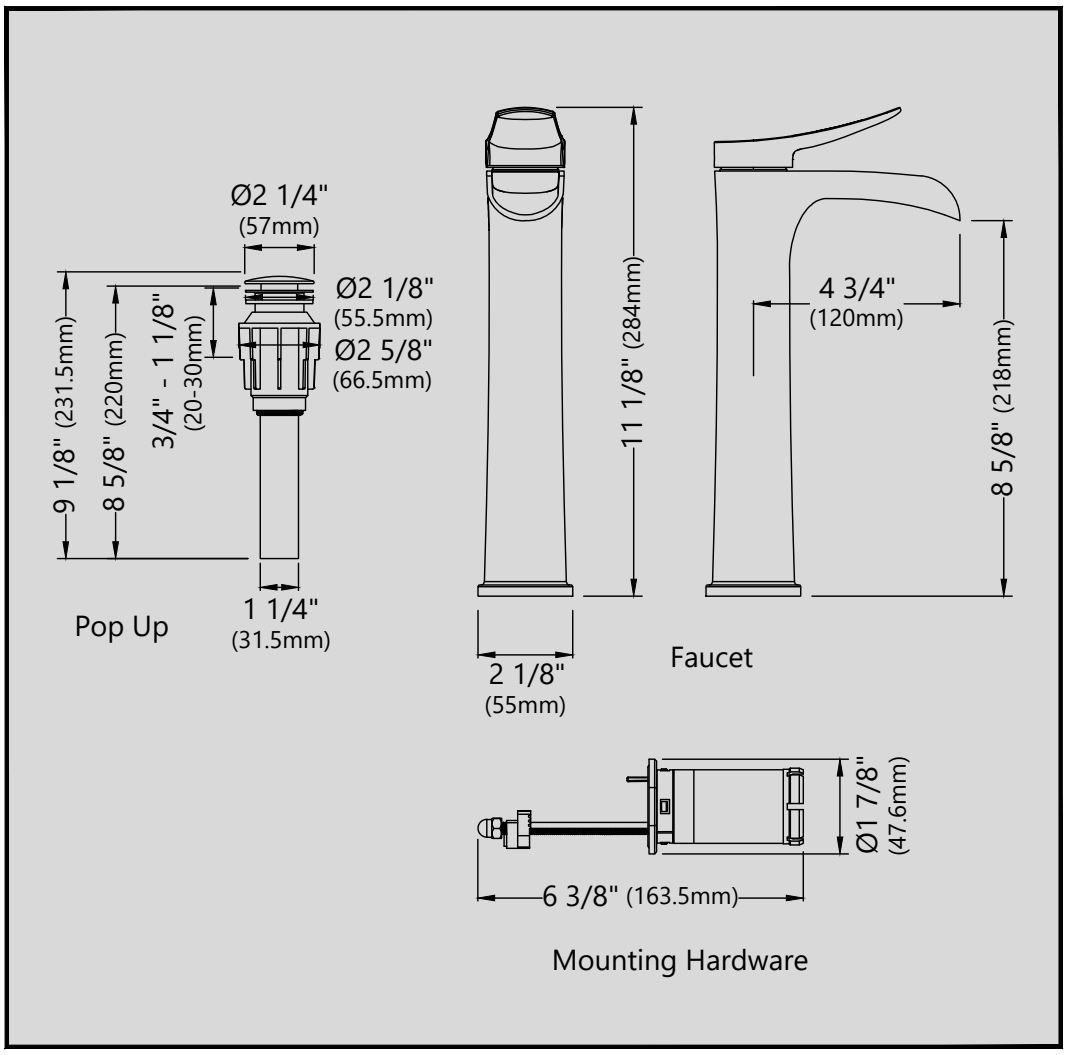

Installation Steps

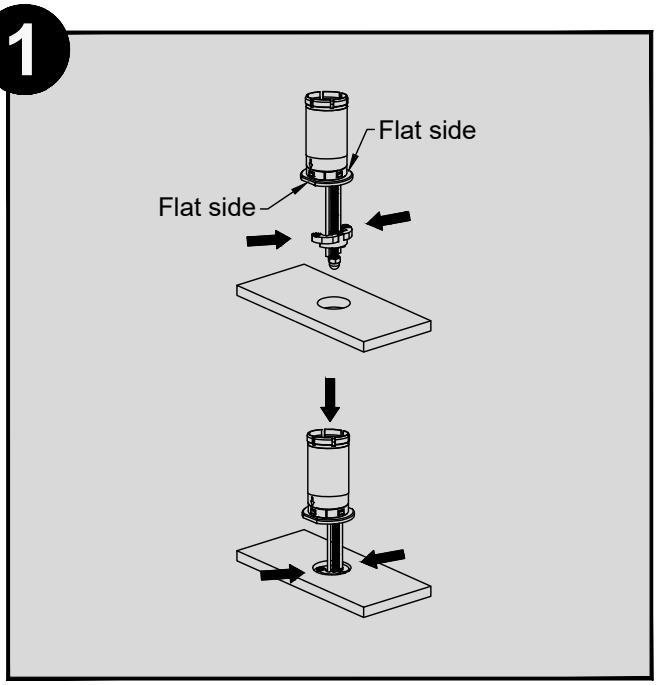

1. Squeeze the arms of the mounting hardware together and place the mounting hardware into the faucet hole. Make sure the flat edges of the mounting hardware face the front and back of the countertop.

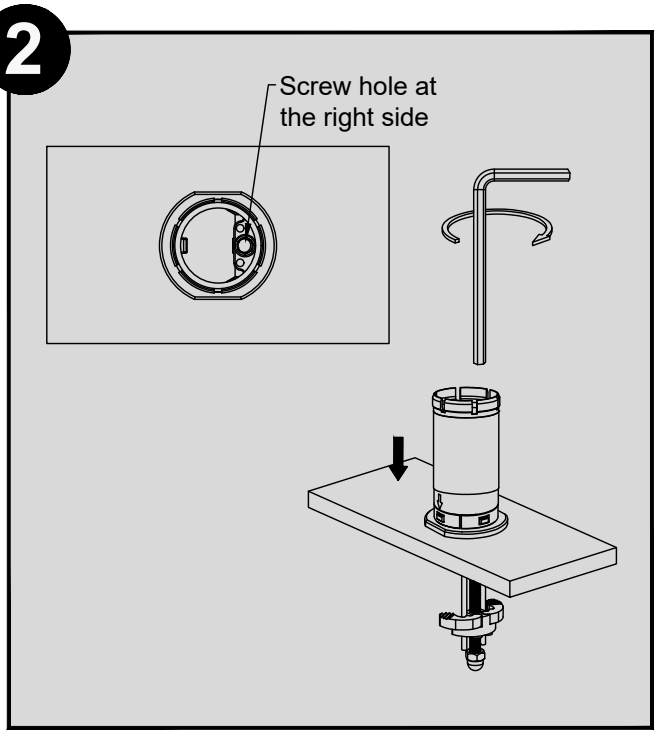

2. Tighten the mounting hardware with the hex wrench. Screw the hole on the right side of the mounting hardware.

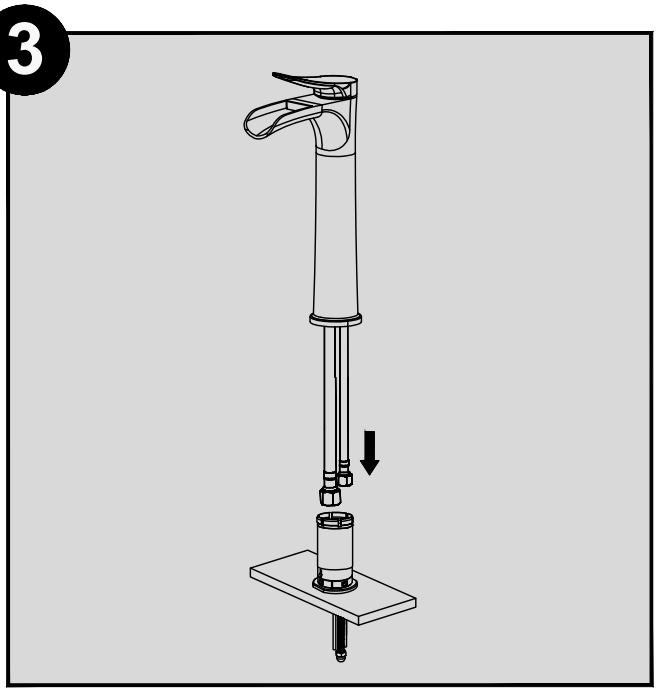

3. Place the faucet and waterlines through the mounting hardware.

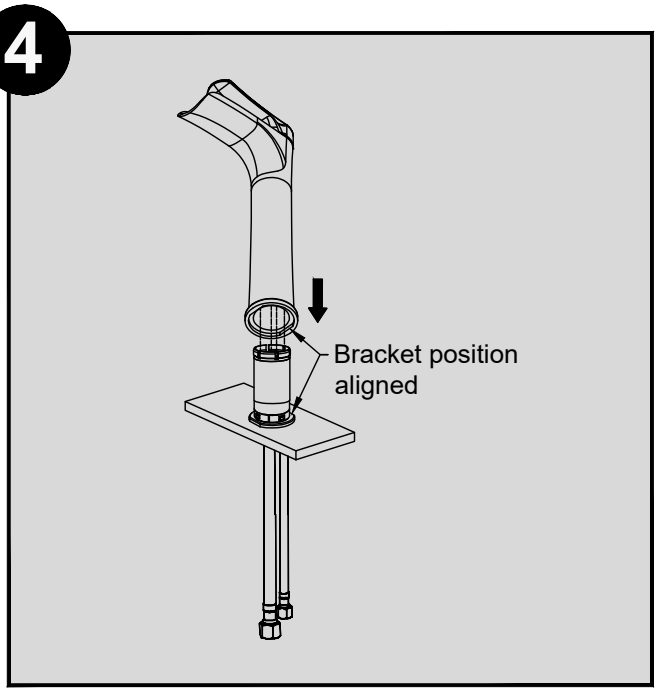

4. Make sure the bracket position is aligned.

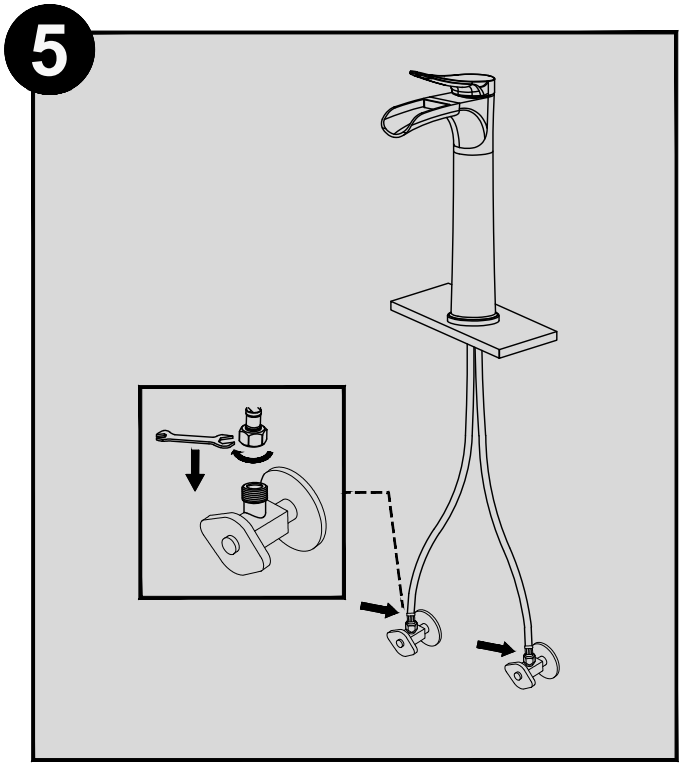

5. Flush the debris from the home's valves prior to installation of the water lines. Connect the waterlines to the water valves until snug. Turn on the water valves and check for leaks.

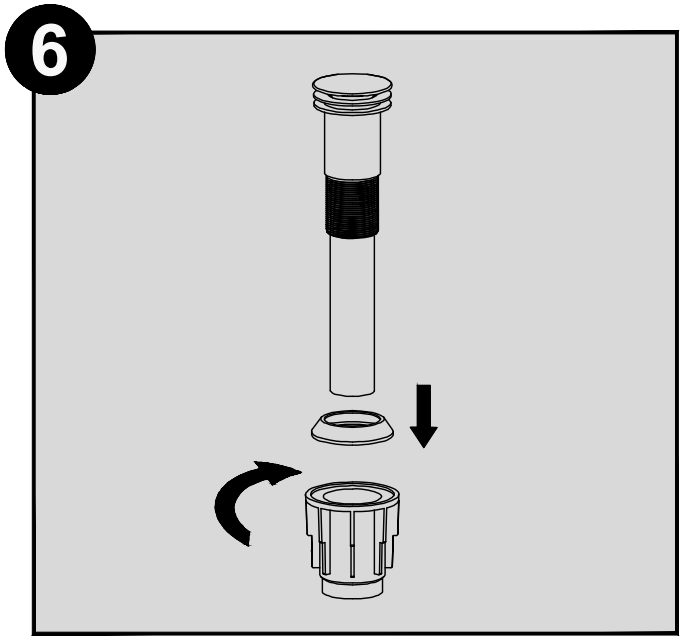

6. Remove the washer and lock nut from the pop up drain.

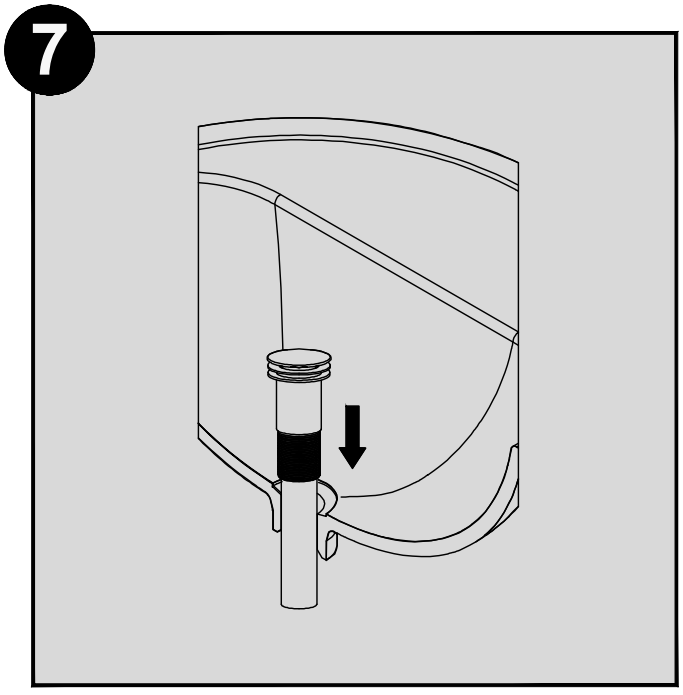

7. Place the pop up drain into the sink drain hole.

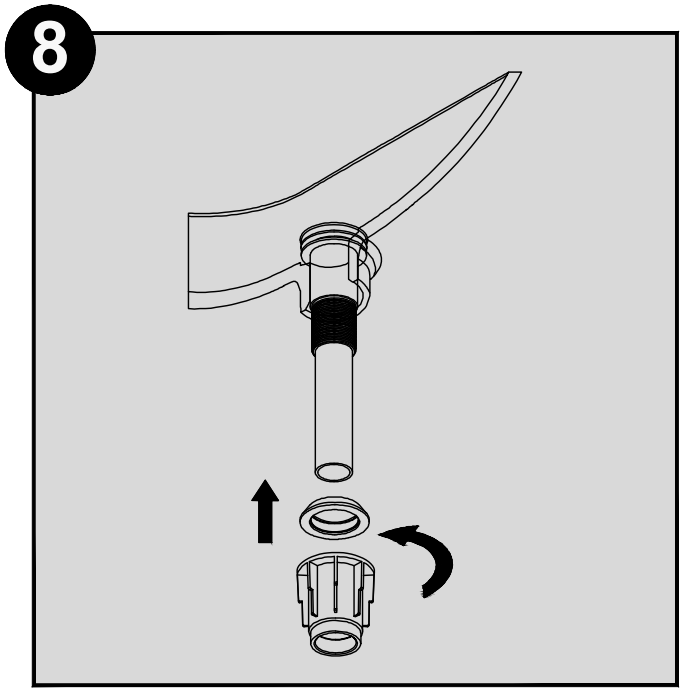

8. Place the washer and lock nut back onto the pop up drain from below the sink. Tighten by hand.

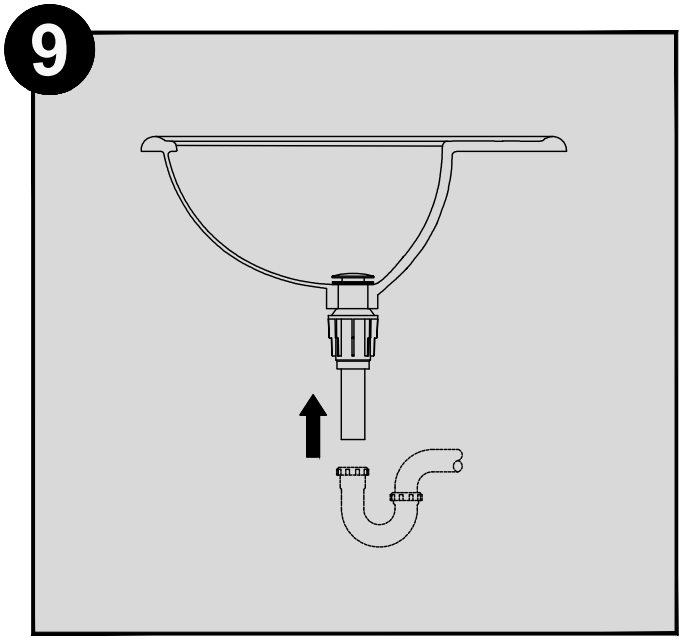

9. Place the pop up drain into the plumbing's existing p-trap. Attach the p-trap (not included) to the tail piece, modify as needed.

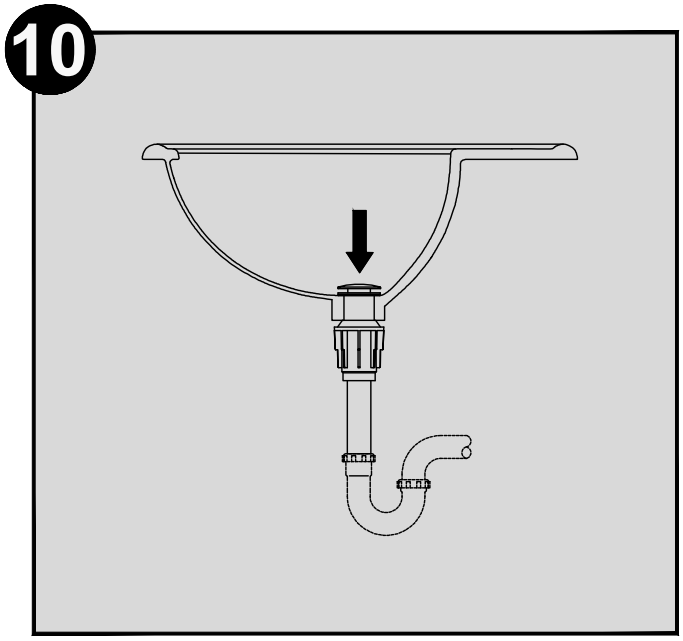

10. Push down on the pop up cover to activate.

Replacement parts

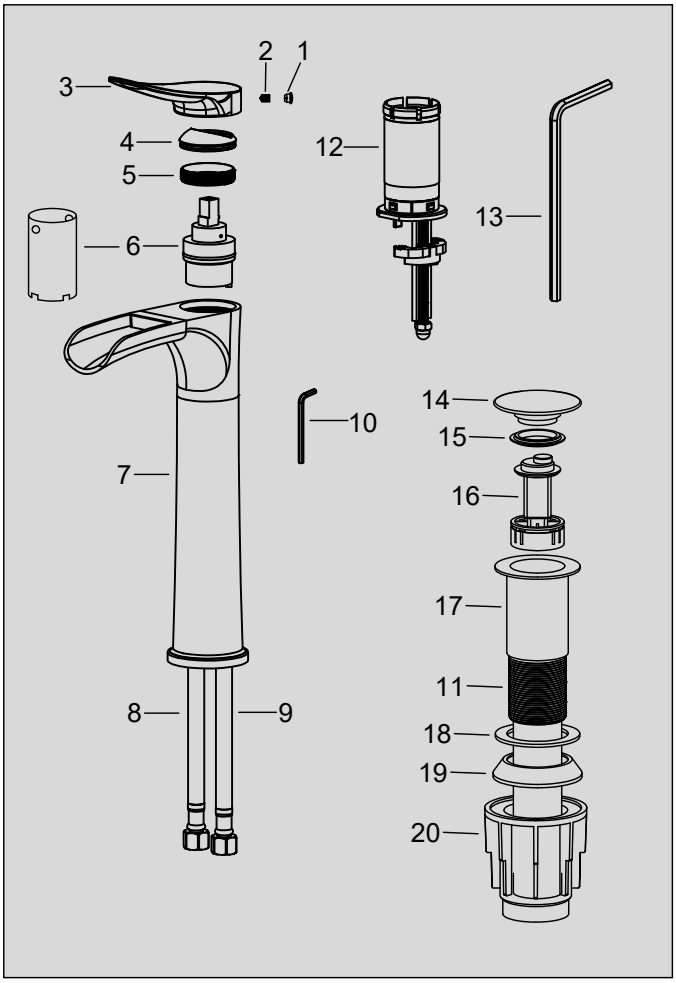

Description	Finishes	Item No.
1. Index	C,MB,SFSS, SFBG*	KPFHD501
2. Hex Screw		
3. Handle		
4. Trim Cap	C,MB,SFSS, SFBG*	KBF400TC
5. Lock Nut		KPFCT501
6. Cartridge & Tool		
7. Faucet Body	C,MB,SFSS, SFBG*	KBF402FB
8. Hot Waterline		KBF402HW
9. Cold Waterline		KBF402CW
10. Hex Wrench (2.5mm)		23AK-2.5
11. Pop-up Drain	C,MB,SFSS, SFBG*	23NOP
12. Mounting Bracket		KPFMB502
13. Hex Wrench (5mm)		
14. Pop-up Cover	C,MB,SFSS, SFBG*	KPFPT501
15. Washer		23-NOFBW
16. Pop-up Core		KPFPC501
17. Pop-up Pipe		23-NOFDPUP
18. Washer		23-NOFEW
19. Washer		23-NOFFW
20. Lock Nut		23-NOFGLN

*Denotes faucet component color options:
C - Chrome
MB - Matte Black
SFSS - Spot Free Stainless Steel
SFBG - Spot Free Brushed Gold

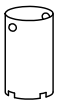

NOTE: Tool not included with initial faucet purchase, it will come with a replacement part order.

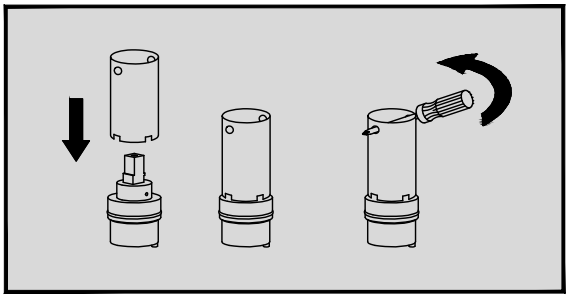

To remove the cartridge, place the tool over the top of it. Using a screwdriver through the holes in the tool, turn counterclockwise to remove the cartridge.

Warranty

Products Subject to this Limited Lifetime Warranty
This Limited Lifetime Warranty applies only to faucets manufactured and sold by Karran USA (the "Company") (the "Products").

Who is Entitled to this Limited Lifetime Warranty
The Company grants this Limited Lifetime Warranty solely in favor of the original purchaser of the Products (the "Original Purchaser"), but to no other person or entity whatsoever. No person or entity, other than the Original Purchaser, shall have any right to assert any claim under this Limited Lifetime Warranty, or otherwise, in connection with the Products. This Limited Lifetime Warranty is personal to the Original Purchaser and may not be transferred by the Original Purchaser to any other person or entity, by contract, operation of law, transfer of the property into which the Products are installed, or otherwise.

Commercial Warranty
The Company warrants its Products for a period of (1) year to commercial purchasers of Products used in industrial, commercial and business applications.

Length of this Limited Lifetime Warranty
This Limited Lifetime Warranty shall begin on the date the Products are purchased from an authorized Company dealer. The structure and finish of the product are warranted to be free from defects in material and workmanship under normal usage for the lifetime of the product. The mechanical components such as but not limited to sprayer head assembly (includes engine, aerators, structure, restrictors, back flow preventers, sprayer hoses, braided supply line hoses which encompasses nylon, silicone and stainless steel, etc.) of the product are warranted to be free from defects in material and workmanship under normal usage for a period of one (1) year from the date of purchase. The mechanical component (cartridge) of the product is warranted to be free from defects in material and workmanship under normal usage for a period of five (5) years from the date of purchase. THIS LIMITED LIFETIME WARRANTY IS IN LIEU OF ALL OTHER WARRANTIES, EXPRESS OR IMPLIED, INCLUDING BUT NOT LIMITED TO THE IMPLIED WARRANTIES OF FITNESS FOR A PARTICULAR PURPOSE AND MERCHANTABILITY.

Please note that some states/provinces (including Quebec) do not allow limitations on how long an implied warranty lasts, so the below limitations may not apply to you. TO THE MAXIMUM EXTENT PERMITTED BY APPLICABLE LAW, ANY IMPLIED WARRANTY, INCLUDING THE IMPLIED WARRANTIES OF MERCHANTABILITY AND OF FITNESS FOR A PARTICULAR PURPOSE, IS LIMITED TO THE STATUTORY PERIOD OR THE DURATION OF THIS WARRANTY, WHICHEVER IS SHORTER.

What is Warranted
Subject to the conditions and limitations set forth in this Limited Lifetime Warranty, the Company warrants to the Original Purchaser that during the Warranty Period the Products will be free from manufacturing and design defects when used under normal conditions and maintained properly.

What the Company Will Do
In the event that any Product fails to comply with this Limited Lifetime Warranty, the Company will free of any cost to you:

1. Provide a replacement part, or component that proves to be defective, or
    a. If the product cannot be economically repaired, replace the product with the same or a comparable product, or
    b. If the same or a comparable model product is not available, make a reasonable monetary adjustment, taking into account the age of the defective product; provided that
    c. In no event will our liability exceed the price you paid for the product (including tax and shipping).
2. We will pay all shipping costs of returning a product to us for inspection (if we make that request) and of sending replacement parts, components, or products to you.

THE FOREGOING DESCRIBES THE COMPANY'S SOLE LIABILITY, AND THE ORIGINAL PURCHASER'S SOLE REMEDY, FOR ANY BREACH OF WARRANTY IN RESPECT OF THE PRODUCTS. THE COMPANY SHALL NOT BE LIABLE FOR, ANY SPECIAL, INCIDENTAL OR CONSEQUENTIAL DAMAGES (INCLUDING LABOR CHARGES TO REPAIR, REPLACE, INSTALL OR REMOVE THIS PRODUCT), WHETHER ARISING OUT OF BREACH OF ANY EXPRESS OR IMPLIED WARRANTY, BREACH OF CONTRACT, TORT, OR OTHERWISE.

How to Make a Claim
To make a claim under this Limited Lifetime Warranty, the Original Purchaser must notify the Company in writing or by phone of any claimed defect in a Product. Such notice must be given promptly following discovery of the claimed defect. The Original Purchaser must submit with such notice proof of purchase and proof of the date of purchase of the Product claimed to be defective. Notification shall be provided to:

USPS
Karran USA
Attention: CLAIMS
PO Box 667
Vincennes, IN 47591

Email: warranty@karran.com
Phone: 866-452-7726

The Company shall then promptly inspect, by means of digital photography or video supplied by the customer, the claimed defect and if such examination does disclose a defect covered by this warranty, shall, within thirty (30) days after inspection provide replacement parts for the defective Product (as it shall elect in its sole and absolute discretion), subject to the terms set forth above.

Limitations
1. The Company shall not be liable under this Limited Lifetime Warranty for any of the following:
    A. Defects in or failure of the Products caused by accidents, physical abuse or misuse of the Products.
    B. Defects in or failure of the Products caused by installation of the Products not in strict adherence with the written instructions of the Company.
    C. Defects in or failure of the Products caused by improper care or maintenance of the Products abrasive cleaners such as powders, ammonia, alcohol or chlorine or chlorine or the use of abrasive pads, steel wool or wire brushes.
    D. Breakage of the Product that is not due to a defect in the manufacture of the Products.
    E. Any damage to the Products caused by impact of foreign objects, earthquake, or other acts of God or by fire, explosion or other casualty.
    F. Defects in, failure of, or damage to the Products caused by materials adjacent to the Products.
    G. Damage to the Products caused by alteration after completion of their installation by anyone who is not authorized by the Company in writing, whether such alteration be by structural additions, changes, replacements or by equipment installation.
    H. Changes in the Products due to gloss reduction, scratching, staining or alkaline etching of the finish over time due to use, cleaning practices or water conditions, all of which are not manufacturing defects but are indicative of normal wear and tear.
    I. This warranty does not cover Products that were discontinued when purchased or display Products, whether such Products were purchased at discount outlets, unauthorized dealers, and/or sold on clearance. This warranty does not cover any free gifts included with purchase.

2. IN NO EVENT SHALL THE COMPANY BE LIABLE FOR CONSEQUENTIAL OR INCIDENTAL DAMAGES OF ANY KIND, INCLUDING, BUT NOT LIMITED TO, ANY DAMAGE TO THE PROPERTY IN WHICH A PRODUCT IS INSTALLED, ITS CONTENTS OR ANY PERSON THEREIN. NO FIELD REPRESENTATIVE, DISTRIBUTOR OR DEALER OF THE COMPANY IS AUTHORIZED TO MAKE ANY CHANGE OR MODIFICATION TO THIS LIMITED LIFETIME WARRANTY. SOME STATES/PROVINCES (INCLUDING QUEBEC) MAY NOT ALLOW LIMITATIONS ON OR THE EXCLUSION OF INCIDENTAL OR CONSEQUENTIAL DAMAGES, SO THE ABOVE EXCLUSIONS MAY NOT APPLY TO YOU.

The invalidity, illegality or unenforceability of any one or more provisions of this Limited Lifetime Warranty shall in no way affect or impair the validity, legality or enforceability of the remaining provisions, which shall remain in full force and effect.

Legal Remedies
This warranty gives you specific legal rights, and you may also have other rights which vary from state to state and province to province. 04-1-24