WORX®

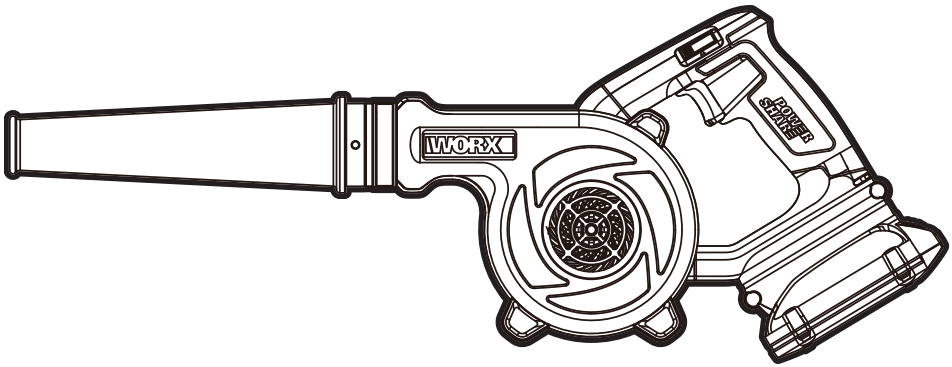

20V MAX POWER SHARE™

20V Li-ion Blower	**EN**	**P06**
	F	**P10**
	ES	**P15**



HELPLINE NUMBER
NUMÉRO DU SERVICE D'ASSISTANCE
NÚMERO DE LÍNEA DE AYUDA
1-866-354-WORX (9679)

WX094L WX094L.9

M

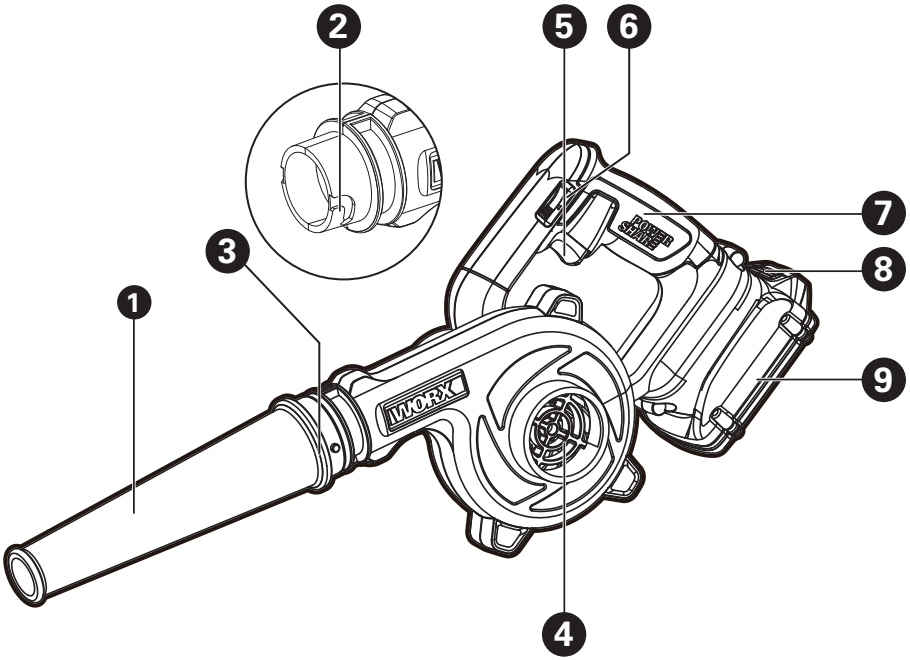
2
5
6
7
3
8
1
9
4

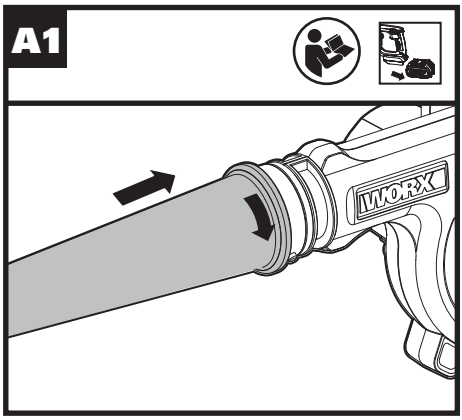
A1
WORX

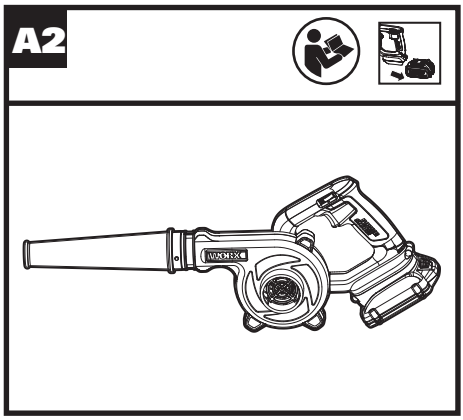
A2

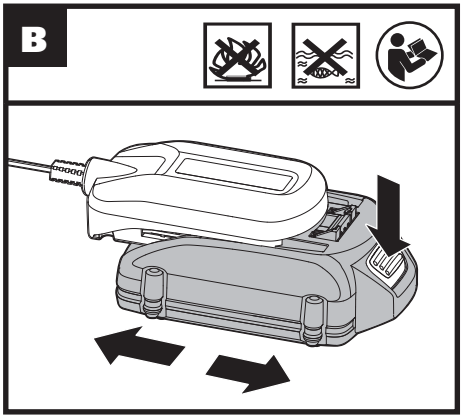
B

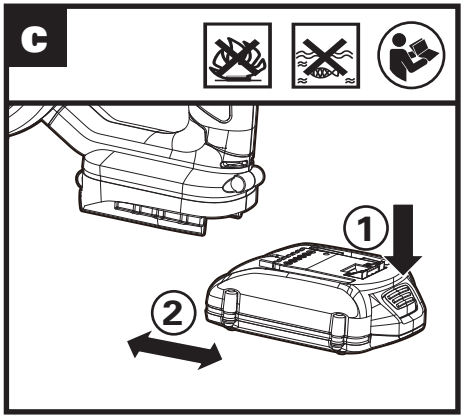
C
1
2

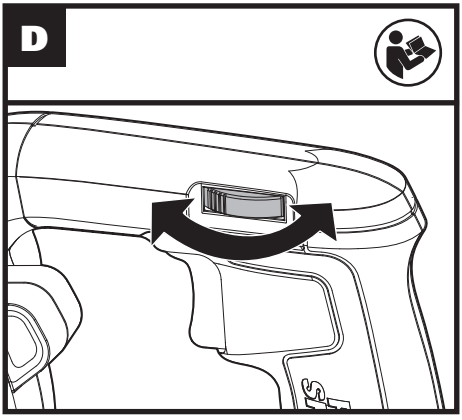
D

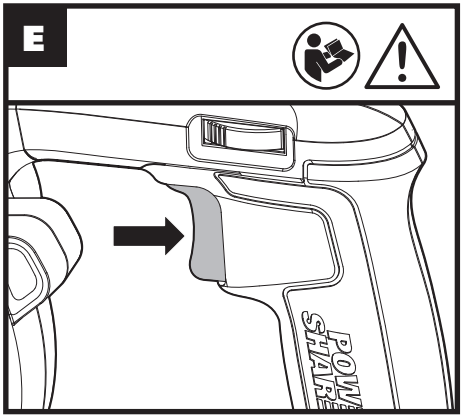
E

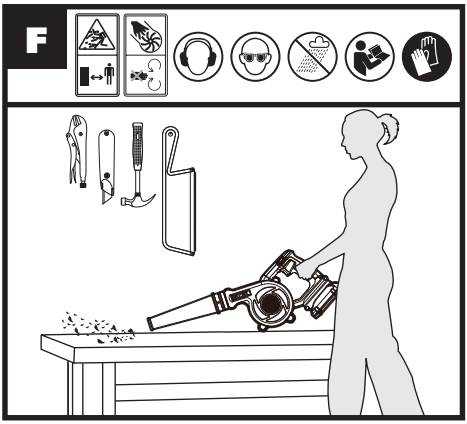
F

PRODUCT SAFETY

WARNING: Some dust created by power sanding, sawing, grinding, drilling and other construction activities contains chemicals known to the state of California to cause cancer, birth defects or other reproductive harm. Some examples of these chemicals are:

- Lead from lead-based paints;
- Crystalline silica from bricks and cement and other masonry products;
- Arsenic and chromium from chemically-treated lumber.

Your risk from these exposures varies, depending on how often you do this type of work. To reduce your exposure to these chemical: work in a well ventilated area, and work with approved safety equipment, such as those dust masks that are specially designed to filter out microscopic particles.

WARNING! This product can expose you to chemicals including lead, phthalate or bisphenol A which are known to the State of California to cause cancer, birth defects or other reproductive harm. Wash your hands after use. For more information go to www.P65Warnings.ca.gov.

IMPORTANT SAFETY INSTRUCTIONS

WARNING: Read all safety warnings and instructions. Failure to follow the warnings and instructions may result in electric shock, fire and/or serious injury.

FOR ALL APPLIANCES

1) Avoid Dangerous Environment - Don't use appliances in damp or wet locations.
2) Don't Use In Rain.
3) Keep Children Away - All visitors should be kept at a distance from work area.
4) Dress Properly - Do not wear loose clothing or jewelry. They can be caught in moving parts. Use of rubber gloves and substantial footwear is recommended when working outdoors. Wear protective hair covering to contain long hair.
5) Use Safety Glasses - Always use face or dust mask if operation is dusty.
6) Use Right Appliance - Do not use appliance for any job except that for which it is intended.
7) Don't Force Appliance - It will do the job better and with less likelihood of a risk of injury at the rate for which it was designed.
8) Don't Overreach - Keep proper footing and balance at all times.
9) Stay Alert - Watch what you are doing. Use common sense. Do not operate appliance when you are tired.
11) Store Idle Appliances Indoors - When not in use, appliances should be stored indoors in dry, and high or locked-up place - out of reach of children.
12) Maintain Appliance With Care. Follow instructions for lubricating and changing accessories. Keep handles dry, clean, and free from oil and grease.
13) Check Damaged Parts - Before further use of the appliance, a guard or other part that is damaged should be carefully checked to determine that it will operate properly and perform its intended function. Check for alignment of moving parts, binding of moving parts, breakage of parts, mounting, and any other condition that may affect its operation. A guard or other part that is damaged should be properly repaired or replaced by an authorized service center unless indicated elsewhere in this manual.

FOR ALL BATTERY – OPERATED GARDENING APPLIANCES

1. Prevent unintentional starting. Ensure the switch is in the off-position before connecting to battery pack, picking up or carrying the appliance. Carrying the appliance with your finger on the switch or energizing appliance that have the switch on invites accidents.
2. Disconnect the battery pack from the appliance before making any adjustments, changing accessories, or storing appliance. Such preventive safety measures reduce the risk of starting the appliance accidentally.
3. Recharge only with the charger specified by the manufacturer .A charger that is suitable for one type of battery pack may create a risk of fire when used with another battery pack.
4. Use appliances only with specifically designated battery packs. Use of any other battery packs may create a risk of injury and fire.
5. When battery pack is not in use, keep it away from other metal objects, like paper clips, coins, keys, nails, screws or other small metal objects, that can make a connection from one terminal to another. Shorting the battery terminals together may cause burns or a fire.
6. Under abusive conditions, liquid may be ejected from the battery; avoid contact. If contact accidentally occurs, flush with water. If liquid contacts eyes, additionally seek medical help. Liquid ejected from the battery may cause irritation or burns.
7. Do not use a battery pack or appliance that is damaged or modified. Damaged or modified batteries may exhibit unpredictable behavior resulting in fire, explosion or risk of injury.
8. Do not expose a battery pack or appliance to fire or excessive temperature. Exposure to fire or temperature above 130°C may cause explosion.
9. Follow all charging instructions and do not charge the battery pack or appliance outside of the temperature range specified in the

instructions. Charging improperly or at temperatures outside of the specified range may damage the battery and increase the risk of fire.

10. Have servicing performed by a qualified repair person using only identical replacement parts. This will ensure that the safety of the product is maintained.
11. Do not modify or attempt to repair the appliance or the battery pack (as applicable) except as indicated in the instructions for use and care.

ADDITIONAL SAFETY WARNINGS

IMPORTANT SAFETY INSTRUCTIONS

When using an electrical appliance, basic precautions should always be followed, including the following:

READ ALL INSTRUCTIONS BEFORE USING THIS APPLIANCE

⚠ WARNING – To reduce the risk of fire, electric shock, or injury:

1. To reduce the risk of electric shock – Do not use on wet surfaces. Do not expose to rain. Store indoors.
2. Do not allow to be used as a toy. Close attention is necessary when used by or near children.
3. Use only as described in this manual. Use only manufacture's recommended attachments.
4. If appliance is not working as it should, has been dropped, damaged, left outdoors, or dropped into water, return it to a service center.
5. Keep hair, loose clothing, fingers, and all parts of body away form openings and moving parts.
6. Do not charge the unit outdoors.
7. Use only the charger supplied by the manufacturer to recharge.
8. Do not incinerate the appliance even if it is severely damaged. The batteries can explode in a fire.
9. Do not put any object into openings. Do not use with any opening blocked; keep free of dust, lint, hair, and anything that may reduce air flow.
10. Do not handle plug or appliance with wet hands.
11. Do not leave appliance when plugged in. Unplug from outlet when not in use and before servicing.
12. Turn off all controls before unplugging.
13. Use extra care when cleaning on stairs.
14. Do not use to pick up flammable or combustible liquids, such as gasoline, or use in areas where they may be present.
15. Do not pick up anything that is burning or smoking, such as cigarettes, matches, or hot ashes.
16. Do not use without dust bag and/or filters in place.

SAFETY WARNINGS FOR BATTERY PACK

a) Do not dismantle, open or shred battery pack.

b) Do not expose battery pack to heat or fire. Avoid storage in direct sunlight.

c) Do not short-circuit a battery pack. Do not store battery packs haphazardly in a box or drawer where they may short-circuit each other or be short-circuited by other metal objects. When battery pack is not in use, keep it away from other metal objects, like paper clips, coins, keys, nails, screws or other small metal objects, that can make a connection from one terminal to another. Shorting the battery terminals together may cause burns or fire.

d) Do not remove battery pack from its original packaging until required for use.

e) Do not subject battery pack to mechanical shock.

f) In the event of battery leaking, do not allow the liquid to come in contact with the skin or eyes. If contact has been made, wash the affected area with copious amounts of water and seek medical advice.

g) Observe the plus (+) and minus (–) marks on the battery back and equipment and ensure correct use.

h) Do not use any battery pack which is not designed for use with the equipment.

i) **Keep battery pack out of the reach of children.**
j) **Seek medical advice immediately if a cell or battery has been swallowed.**
k) **Always purchase the battery pack recommended by the device manufacturer for the equipment.**
l) **Keep battery pack clean and dry.**
m) **Wipe the battery pack terminals with a clean dry cloth if they become dirty.**
n) **Battery pack needs to be charged before use. Always use the correct charger and refer to the manufacturer's instructions or equipment manual for proper charging instructions.**
o) **Do not leave battery pack on prolonged charge when not in use.**
p) **After extended periods of storage, it may be necessary to charge and discharge the battery pack several times to obtain maximum performance.**
q) **Battery pack gives its best performance when it is operated at normal room temperature (20 °C ± 5 °C).**
r) **When disposing of battery packs, keep battery packs of different electrochemical systems separate from each other.**
s) **Recharge only with the charger specified by WORX. Do not use any charger other than that specifically provided for use with the equipment.** A charger that is suitable for one type of battery pack may create a risk of fire when used with another battery pack.
t) **Retain the original product literature for future reference.**
u) **Use only the battery pack in the application for which it was intended.**
v) **Remove the battery pack from the equipment when not in use.**
w) **Dispose of properly.**

SYMBOL

	To reduce the risk of injury, user must read instruction manual
	Wear ear protection
	Wear eye protection
	Do not use in the rain or leave outdoors while it is raining.
	Warning of hazard
	Keep bystanders away
	Li-Ion battery, battery must be recycled
	Do not expose to rain or water
	Do not burn
	Make sure the battery is removed prior to changing accessories.
	Wear protective gloves



call2recycle®

POSITEC Inc. has established a partnership with the RBRC Corporation to recycle any Positec batteries with the RBRC-call2recycle seal. For environmental protection, please do not discard batteries in the trash. After the batteries' life cycle is ended, then please call 1-800-822-8837 for a free service that will properly dispose of the battery.

1.	**BLOWER TUBE**
2.	**INTERFACE**
3.	**BLOWER TUBE CONNECTOR**
4.	**AIR INLET**
5.	**ON/OFF SWITCH**
6.	**VARIABLE SPEED DIAL**
7.	**HANDLE**
8.	**BATTERY PACK RELEASE BUTTON ***
9.	**BATTERY PACK***

*** Not all the accessories illustrated or described are included in standard delivery.**

TECHNICAL DATA

	WX094L	WX094L.9
Voltage	20V⎓ Max**	
No load speed	I: 11000/min II: 15000/min III: 18000/min	
Air volume	I: 60cfm II: 80cfm III: 100cfm	
Blow speed	160mph	
Charging time	2 hrs (approx.)	
Machine weight	2.87lbs	2.21lbs

** Voltage measured without workload. Initial battery voltage reaches maximum of 20 volts. Nominal voltage is 18 volts.

ACCESSORIES

	WX094L	WX094L.9
Blower tube	1	1
Battery pack(WA3520)	1	/
Charger(WA3742)	1	/

We recommend that you purchase your accessories listed in the above list from the same store that sold you the blower. Refer to the accessory packaging for further details. Store personnel can assist you and offer advice.

OPERATION


Read the operator's manual

INTENDED USE:
The blower is intended for residential use only. Use the blower outdoors to move yard debris as needed.

Note:
- **Remove the battery pack before carrying out any adjustment, servicing or maintenance.**
- **Make sure that ON/OFF Switch is on "O" position before assembling or removing any accessories.**

ASSEMBLY AND OPERATION

ACTION	Figure
ASSEMBLY	
Assembling the blower tube	See Fig A1, A2
BEFORE OPERATION	
Charging the battery pack Your battery pack is UNCHARGED, you must charge before use. More details can be found in charger's manual ⚠ WARNING! The charger and battery pack are specially designed to work together, so do not attempt to use any other devices. Never insert or allow metallic objects into your charger or battery pack connections because of an electrical failure and hazard will occur.	See Fig B
Installing & removing the battery pack	See Fig C
OPERATION	
Using the variable speed dial(1, 2, 3)	See Fig D
Starting & Stopping ⚠ WARNING! The tool runs for a few seconds after it has been switched off. Let the motor come to a complete standstill before setting the tool down.	See Fig E
Using the blower	See Fig. F

CLEANING THE TOOL

Clean the tool regularly.

WARNING! Keep your product dry.
Under no circumstances spray with water.

- To clean the tool, use only mild soap and a damp cloth.
- Do not use any type of detergent, cleaner or solvent which may contain chemicals that could seriously damage the plastic.
- Self lubricating bearings are used in your product, therefore lubrication is not required.

FOR BATTERY TOOLS

The ambient temperature range for the use and storage of tool and battery is 0°C-45°C.
The recommended ambient temperature range for the charging system during charging is 0°C-40°C.

WORX

you've got the power

www.worx.com

Copyright © 2018, Positec. All Rights Reserved.
Copyright © 2018, Positec. Tous droits réservés.
© Derechos reservados 2017, Positec. Todos los derechos reservados.