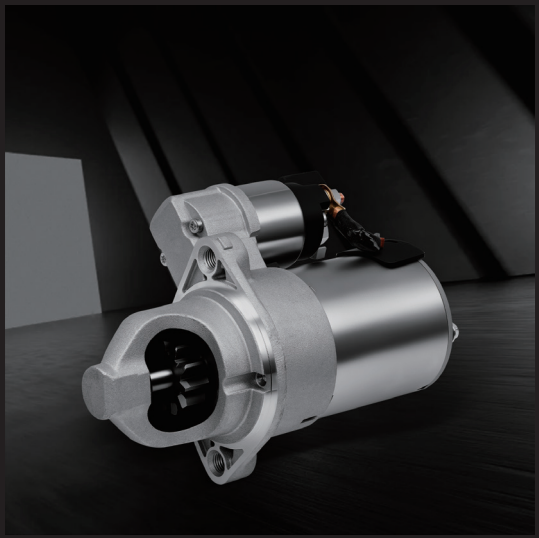

AUTOMOTIVE STARTER INSTALLATION AND OPERATING INSTRUCTIONS

Please read this manual carefully before using the product and keep it properly for future reference

Important Notice

Official Website Whats APP

If the starter does not work, is weak, makes noise, or does not disengage, do not judge it as defective immediately. Check the following items first. Many starting problems are caused by battery, wiring, installation, vehicle conditions, flywheel, or engine issues.

Safety First

Note:Disconnect the battery negative terminal before inspection

Before inspection, disconnect the battery negative terminal and follow the vehicle service manual. Do not continuously crank the starter for more than 10–15 seconds; allow it to cool between attempts.

1 Battery and Charging System

1.1 Check battery voltage and condition.

A weak or aged battery may crank slowly or cause a “click” with no crank. Check static voltage and cranking voltage.

1.2 Check battery terminals and charging system.

Corroded terminals, loose clamps, or a faulty alternator can cause starting problems even with a new starter.

1.3 Check cold-start conditions.

Very low temperature, incorrect oil viscosity, or a weak battery can make cranking difficult.

2 Wiring and Ground Connection

2.1 Check the main B+ cable and starter signal wire.

A loose, oxidized, or incorrectly connected B+ cable or S-terminal wire can prevent the starter from working.

2.2 Check fuses, fusible links, and relays.

A blown fuse, damaged fusible link, or stuck relay can interrupt the starting circuit.

2.3 Check engine and starter ground connections.

Poor grounding increases resistance and causes slow cranking, heat, or intermittent starting.

2.4 Check voltage drop under load.

Measure voltage drop on the B+ cable and ground circuit during cranking. Excessive drop indicates wiring problems.

3 Installation and Connection Errors

3.1 Verify correct part fitment before installation.

Compare gear teeth, flange type, mounting holes, drive-end direction, voltage, and power rating with the old starter.

3.2 Connect B+ and S terminals correctly.

Incorrect terminal connection may cause no crank, continuous cranking, or damage to the starter.

3.3 Tighten mounting bolts to specified torque.

Loose mounting bolts or a dirty mounting surface can cause misalignment, noise, or gear damage.

3.4 Do not crank continuously for a long time.

Long continuous cranking can overheat the starter and damage the solenoid or motor.

4 Vehicle Starting Conditions

4.1 Automatic transmission: confirm P/N position.

If the gear selector is not in P or N, or the range switch is faulty, the starter will not receive the start signal.

4.2 Manual transmission: confirm clutch pedal is pressed.

A faulty clutch switch or not pressing the clutch can prevent cranking.

4.3 Push-start models: check brake switch, key battery, and immobilizer.

A weak key battery, brake switch fault, or immobilizer non-recognition can block starting.

4.4 Check aftermarket alarm or remote-start modules.

Improperly installed accessories may cut off the start signal or cause intermittent no-crank.

5 Engine Mechanical Resistance and Flywheel

5.1 Check whether the engine can be rotated manually.

If the engine is seized, hydrolocked, or has timing/mechanical failure, the starter may stall or appear weak.

5.2 Check accessory drive components.

A seized A/C compressor, alternator, or tensioner can overload the starter.

5.3 Check flywheel ring gear and gear meshing.

Worn or missing ring gear teeth, wrong gear teeth count, or incorrect shims can cause grinding, or intermittent engagement.

5.4 Check for abnormal noise after installation.

Noise may come from misalignment, loose bolts, incorrect shims, or flywheel damage—not necessarily the starter.

6 Hot Start and Starter Engagement

6.1 Hot engine restart difficulty.

If the starter works when cold but is weak when hot, check heat soak, battery condition, cable resistance, and heat shielding.

6.2 Starter remains engaged after engine start.

If the starter keeps running, disconnect the battery immediately and check the ignition switch, relay, S-terminal, and solenoid.

6.3 Intermittent no-crank.

Loose connectors, oxidized terminals, a sticking relay, or a faulty ignition switch can cause intermittent starting.

7 Diesel and Accessory-Related Conditions

7.1 Diesel engines: check glow plugs and fuel system.

If the starter cranks strongly but the engine does not start, check glow plugs, fuel supply, injection timing, and preheating system.

7.2 Check battery CCA and starter specification for diesel engines.

A diesel engine requires higher cranking current; an undersized battery or wrong starter specification can cause weak cranking.

7.3 Check aftermarket electrical accessories.

Additional alarms, trackers, or remote starters may interfere with the starting circuit.

For fitment verification, provide VIN, old-part photos, battery voltage, and terminal connection photos

Automotive Starter Installation and Operating Instructions

1、Safety Precautions

1. Always disconnect the negative battery terminal before installation to prevent short circuits, electrical sparks, wiring damage, or starter motor damage.
2. Never install or remove the starter motor while the battery is connected or the ignition switch is turned on.
3. The starter motor is designed for short-duration operation. Do not crank the engine for more than 3–5 seconds per attempt. If the engine fails to start, wait at least 15 seconds before trying again. Repeated cranking without sufficient cooling time may cause the motor windings to overheat and burn out.
4. Do not short-circuit or bypass the starter solenoid terminals during testing, as this may damage the flywheel ring gear.
5. After installation, ensure that no tools, debris, or foreign objects are left inside the transmission bellhousing.

2、Pre-Installation Inspection

1. Model Compatibility: Verify that the starter motor is compatible with the vehicle and engine model. Ensure that the pinion gear tooth count, mounting hole positions, and power rating meet the original equipment (OE) specifications.
2. Visual Inspection: Check the housing for cracks and the electrical terminals for damaged threads. Ensure that the drive pinion gear moves freely and that the overrunning clutch operates in one direction only (engages to drive the flywheel in the cranking direction and freewheels in the opposite direction).
3. Electrical Inspection: Perform a preliminary check to ensure that the starter solenoid engages smoothly without sticking or producing unusual noises.
4. Required Hardware: Prepare the mounting bolts, washers, seals, and terminal nuts. Replace any worn or deteriorated gaskets or seals as necessary.

3、Installation Steps

1. Disconnect the negative battery cable.

2. Disconnect the main power cable (heavy-gauge positive cable) and the starter solenoid control wire. Label each connection for proper reinstallation.
3. Remove the starter mounting bolts and carefully take out the old starter motor. Clean any oil, grease, and carbon deposits from the mounting surface of the transmission bellhousing.
Important: Inspect the flywheel ring gear for chipped, broken, or severely worn teeth. Replace the ring gear if necessary, as damaged teeth may cause premature damage to the new starter pinion gear.
4. Align the new starter motor with the locating pins and carefully position it against the mounting surface. Once properly seated, install the mounting bolts and tighten them evenly in a crisscross pattern. Avoid tightening one side excessively, as this may distort or damage the starter housing.
5. Connect the electrical wiring: Attach the main positive power cable to the B+ terminal and the control wire to the starter solenoid S terminal. Securely tighten the terminal nuts and ensure all electrical connections are clean and tight. Loose connections can cause excessive heat buildup and damage the starter motor.

6. Double-check that the wiring harness is properly routed and does not contact or interfere with the exhaust system or any moving components.
7. Reconnect the negative battery cable.

4、Testing and Operational Check

1. Shift the transmission into Neutral (manual transmission) or Park (automatic transmission), and depress the brake pedal.
2. Briefly turn the ignition key to start the engine. The starter motor should operate smoothly without gear grinding, harsh noises, or unusual sounds.
3. After releasing the ignition key, ensure that the starter pinion gear disengages and retracts promptly. The starter should not continue rotating with the engine or produce a continuous whining noise.
4. If gear grinding or delayed pinion retraction occurs, check that the starter mounting surface is properly seated, inspect the flywheel ring gear for wear, and verify that the starter shims are of the correct thickness.

5、Operating Guidelines and Maintenance

1. If the engine is difficult to start when cold, avoid repeated or prolonged cranking. First, check the battery voltage, fuel system, and spark plugs for potential issues.
2. Avoid attempting to start the engine with a weak or discharged battery. Low battery voltage may cause excessive current draw, overheating, and potential damage to the starter motor.
3. Regularly inspect the electrical terminals for corrosion and loose connections. Keep the starter motor clean and dry, and avoid prolonged exposure to water, excessive moisture, or heavy oil contamination.

6、Common Troubleshooting Tips

Single Clicking Sound Without Cranking: Possible causes include a weak or discharged battery, loose control wire connections, or a faulty starter solenoid.
Continuous Gear Grinding During Starting: Possible causes include incorrect starter mounting clearance, damaged flywheel ring gear teeth, or a faulty overrunning clutch.
Starter Continues Running After Engine Starts or Is Turned Off: The starter solenoid contacts may be stuck or welded together. Immediately disconnect the power supply and have the starter system inspected and repaired.



Official Website



WhatsApp

Oktiger

Ok tiger Ok car

E-mail:oktigerokcar@gmail.com

Official Website:http://langziyi.com/