HONDA

Owner's Manual

SUBMERSIBLE PUMP

WSP33AA • WSP53AA • WSP73AA

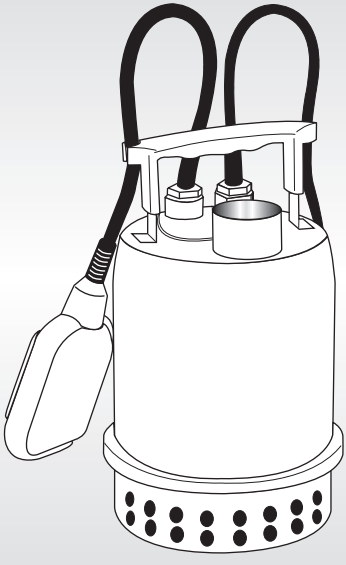

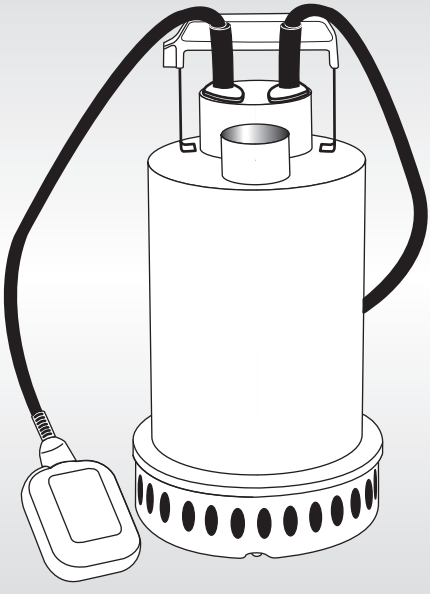

BY: EBARA

© 2022 American Honda Motor Co., Inc.—All Rights Reserved

Thank you for purchasing this Honda Stainless Steel Sump Pump. We hope you are pleased with your purchase and that our pumps will provide you with long service life and exceptional performance.

To ensure satisfactory service life, there are several considerations regarding proper installation, operation, and power source. Please review the recommendations outlined within this operator's manual.

Please contact your supplier (supplying dealer or contractor) if service is necessary or if you have any questions or need further assistance.

Please retain the following information for your records and to help expedite service:

Purchase Date: _____

Purchased From: _____

_____

Serial No: _____

(Located on the pump nameplate)

Important Safeguards

To reduce risk of injury, *always* follow these instructions and safety precautions when using this pump and to maintain the Distributor's Limited Warranty.

Read All Instructions Prior to Installation
(SAVE THESE INSTRUCTIONS)

Installation/Operation

- Never lift or carry the pump by the electrical cord. Use a chain or rope affixed to the handle to install or remove the pump. To reduce potential damage to the pump from inadvertent lifting by the electrical cord, refer to "Proper Lifting" on page 2.
- This pump must be operated fully submerged. Pump must be shutdown if the sump, pit, or pond level drops below the motor housing.
- Pump is designed to pump clean water (maximum temperature of 122°F) with suspended solids up to 3/16 of an inch. Larger solids will clog the suction strainer plate leading to dry running and subsequent failure. (Note: *Pumping sand, gravel, and other hard debris will shorten the life of the pump.*) Elevate the pump with bricks or other support above the sump, pit or pond bottom if debris is present.
- Clean the filter basin when cleaning the inlet filter media when the pump is shut down.
- If used with a float switch, the float must have a full range of motion to operate properly without obstruction. Refer to "Submersible Pump Installation" on page 9.
- Pump should be mounted upright only (vertical). Never lay the pump on its side.

Electrical Requirements

- Pump must be operated with a GFCI breaker of at least 15 amps.
- High OR Low Voltage can damage the pump. Power from your utility or generator set cannot be more or less than 10% of the rated voltage shown on the pump.
- Maximum distance from power source and pump must not exceed 100 feet using 16/3 electrical cables. This distance is from the breaker box and includes the pump cord. If the run is longer, consult a qualified electrician or your dealer.
- Lightning strikes can destroy the capacitor in your pump. Ensure proper protection is provided.
- Consult this manual for additional operation and application information.

Proper Lifting

A separate chain or rope should be attached to the handle for normal lifting.

Note that this will help prevent damage due to inadvertent lifting of the pump by the power cord.

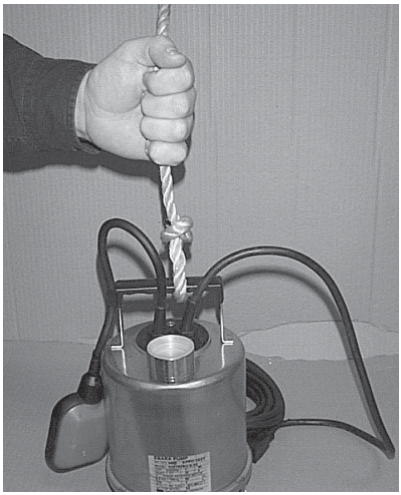

Rope attached to the automatic pump for lifting and installation.

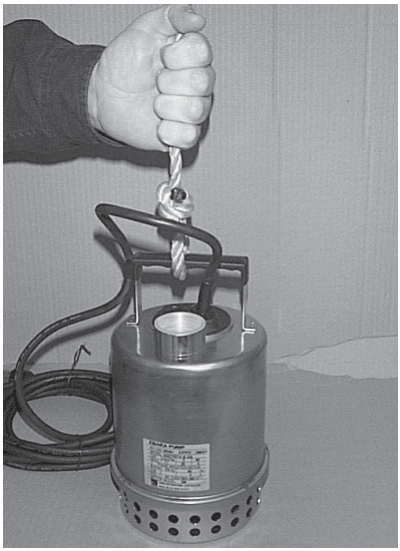

Rope attached to the manual pump for lifting and installation.

Contents

Section	Page
General Application Information	3
Safety Information and Introduction	5
General Specifications	6
Tools Needed	6
Materials Needed	6
Installation Instructions	7
Electrical Information	8
Submersible Pump Installation	9
Performance Table (Capacity in Gallons per Minute)	10
WSP Submersible Pump Installation Diagram	11
Motor Wiring Diagram	12
Operation	14
Technical Specifications	15
Troubleshooting Checklist	16
Maintenance and Service	17
Sectional View – WSP33K1AA	18
Sectional View – WSP53AA, WSP73AA	20
Disassembly and Assembly	21
Customer Service Information	22
Distributor's Limited Warranty	23

General Application Information

The Sump and Installation

If your basement does not currently have a sump installed, it will be necessary to check local plumbing codes as to the acceptable type of sump that may be used. Materials commonly specified are: clay tile, fiberglass, steel, concrete, and polyethylene. It may be necessary to cut a hole in the basement floor and excavate for the sump. Plumbing and electrical contractors can advise on proper installation of drain tiles, sump, pump, and electrical service. Honda recommends that a solid sump base be provided. The sump is fed by drain tile placed around the outside and/or inside basement walls at the footings. In applications where a gravel base must be used to relieve hydraulic pressure under the basement floor, be sure to provide a permanent and solid base for the pump (bricks or a steel plate). A sump cover capable of supporting 200 pounds should be employed to contain odors and for obvious safety reasons.

Electrical Installation

Electrical service for any sump pump installation must be grounded and separately fused or breakered directly from the entrance box with a single grounding type receptacle at the pump. The receptacle should not be less than four feet above the basement floor for safety reasons. You should never touch a sump pump or discharge piping while the pump is connected to electrical power and water is present. The pump should be disconnected from the electrical source before handling in all cases.

Discharge Piping Installation

To assure the maximum performance from your sump pump, the discharge pipe size and piping fittings should not be smaller than the discharge port of the pump. Smaller pipe will add to friction losses and reduce the capacity of the pump. Normally accepted materials are galvanized pipe, rigid plastic pipe, or acceptable flexible pipe or hose. A piece of flexible hose between the pump discharge and the discharge piping will provide for ease in alignment, reduce vibration and noise, and it will act as a union when it is necessary to remove the pump. Where the discharge pipe is long, a check valve is often employed to prevent the water from flowing back into the sump when the pump turns off. If the discharge is directed into a sanitary sewer, a suitable anti-siphon device or a free flow check valve should be inserted in the line to prevent backflow into the pit. Sump pumps are not designed to handle raw sewage (see “Septic Tank Installation” on page 7). Do not attempt to adapt one for this type of application. A sewage ejector pump especially designed to handle solids must be used.

Pump Installation

When the sump, electrical and discharge plumbing installation is complete and ready for the pump, clean all solid debris from the pit. Complete the plumbing connection to the pump and then plug the pump into the electrical outlet. A few extra minutes to test the sump pump installation are now in order. Fill the sump with water, note the turn on and turn off level of the pump, and the pumping cycle. This will allow you to calculate the approximate discharge flow of the pump system. If everything is operating properly, install the sump cover.

Pump Selection

The pump should be of sufficient capacity and head to satisfy anticipated use requirements.

Basement perimeter water intrusion varies by area and region. Typically a 1/3 HP or 1/2 HP DRAINAGE PUMP WILL EVACUATE MOST HOME SUMP PITS. Commercial and industrial drainage applications require that calculations of pumping volume and pumping head be performed to determine the proper size pump is applied.

NOTE: Pumping volume may vary seasonally due to rainfall and area run-off.

Basin and Cover

The basin should not be less than 18 inches in diameter and 24 inches deep. Larger diameters are advisable in instances of increased pump capacity requirements:

Required Pump Capacity	Minimum Basin Diameter
Up to 35 GPM	18"
Over 35 GPM	24"
Over 60 GPM	30"
Over 100 GPM	36"
Over 150 GPM	48"

The basin should be located such that all water flows into the basin due to gravity. Outdoor installations should be at a sufficient depth to ensure protection from freezing.

Maintenance Tips

- Every three or four months:
  1) Clean the pump screen or inlet opening. If your sump collects the discharge from an automatic washing machine, cleaning will be required more often. (Before removing the pump, be sure to disconnect the unit from electrical power; and reconnect after completion of cleaning).
  2) Pour enough water into the sump to cycle the pump and assure its proper functioning.
- Annually:

  Remove and clean the pump. Clean the sump pit also.

Safety Information and Introduction

⚠ WARNING



Before handling this pump, always disconnect the power first.

This pump should only be serviced by a qualified person or a factory trained person.

⚠ CAUTION

This instruction manual includes necessary items for installation, operation, and maintenance. Read this manual carefully to ensure correct installation, operation, and maintenance. Be sure to keep this instruction manual on hand for future reference.



WARNING: Cancer and Reproductive Harm - www.P65Warnings.ca.gov

General Specifications

⚠ CAUTION

Be careful not to exceed the given specifications in the use of your products.

Check the nameplate for your pump's head (HEAD), discharge volume (CAPACITY), speed (SPEED), motor voltage, and current. Other specifications are noted in the chart below:

Model	Discharge Diameter (inch)	Motor Output (HP)	Motor Phase	Voltage	Weight (lb)
WSP33K1AA	1-1/4	1/3	1	115	11
WSP53AA	1-1/2	1/2	1	115	27
WSP73AA	1-1/2	3/4	1	115	27

Tools Needed

- Screwdriver
- Pipe wrench
- Adjustable wrench (medium-large)
- Hacksaw with 24-tooth blade for cutting plastic pipe
- Knife or round file for smoothing inside of all plastic pipe connections

Materials Needed

- PVC or ABS pipe cement (read manufacturer's instructions carefully)
- PVC or ABS pipe;
  - 1-1/4" for WSP33K1AA
  - 1-1/2" for WSP53AA, WSP73AA
- PVC adapter
  - 1-1/4" for WSP33K1AA
  - 1-1/2" for WSP53AA, WSP73AA
- In-line check valve
- Sump basin 18" or larger diameter plastic, fiberglass, or concrete. (See page 5 for minimum diameter basin size by pump capacity.)
- Optional: gate valve (see "WSP Submersible Pump Installation Diagram" on page 11).

Installation Instructions

Step 1. Carefully inspect the pump for damage that could cause it to fail. Your pump has been carefully packaged to prevent damage during shipping; however, occasional damage does occur due to rough handling.

Step 2. Attach the desired length of PVC or ABS discharge pipe to the pump outlet, using PVC adapter (1-1/4" pipe and adapter for WSP33K1AA, 1-1/2" for WSP53AA and WSP73AA). Make sure the open end of pipe will be above the top of the basin.

Step 3. Clear the sump basin of any water, debris, or sediment.

Step 4. Lower the pump into the basin.

Step 5. Attach the in-line check valve to the discharge pipe 12" to 18" above the pump discharge. Make sure the arrow is pointing away from the pump (with the flow). Connect the other end of the check valve securely to the drain pipe and tighten the clamps.
Note: Do not put the check valve directly into the pump discharge opening.

Step 6. Dr ill a 1/8" relief hole in the discharge pipe 5" above the pipe connection to the pump.

Step 7. Plug in the pump and fill the sump basin with water to test the unit. The pump should turn on when the water level is 13" to 14". Allow the pump to go through several ON-OFF cycles to assure satisfactory operation.
Note: If the pump does not operate properly, see “Troubleshooting Checklist” on page 16.

Septic Tank Installation

The WSP pumps can be used to pump septic tank effluent (not containing greater than 3/8" solids), but must be installed as follows:

- Install the pump in a separate compartment at the discharge side of the septic tank. Never install the pump in the main tank where sludge collects.
- Use with a junction box.

WARNING: The sump basin must be vented in accordance with local plumbing codes. These pumps are not designed for and CANNOT be installed in locations classified as hazardous in accordance with the National Electric Code, ANSI/NEPA 70-1984.

Electrical Information

- Pumps are 115 V, 60 Hz and are grounded to prevent electrical shock.

WARNING: Risk of electric shock—this pump is supplied with a grounding conductor and grounding-type attachment plug. To reduce the risk of electric shock, be certain that it is connected only to a properly grounded, grounding-type receptacle.

- Use a separate 15 amp GFCI circuit breaker or 15 amp fuse block with the pump.
- Do not use an extension cord with the pump.
- Do not cut off the ground pin or use an adapter fitting.
- Do not work on the pump or switch until any or all power cords are unplugged.

IMPORTANT INSTRUCTIONS BEFORE INSTALLATION

Failure to follow these instructions may cause serious bodily injury and/or property damage.

1. Before installing or servicing your pump, BE CERTAIN the pump power source is disconnected.
2. Installation and electrical wiring must adhere to state and local codes and must be complete before priming the pump. Check appropriate community agencies or contact local electrical and pump professionals.
3. CALL AN ELECTRICIAN WHEN IN DOUBT. Pump should be connected to a separate 15 amp GFCI circuit breaker or 15 amp fuse block and a GFCI receptacle. Plugging into existing outlets may cause low voltage at the motor, resulting in blown fuses, tripping of the motor overload, or a burned-out motor.
4. Do not connect the pump to a power supply until permanently grounded. For maximum safety, ground the pump to a circuit equipped with a fault-interrupter device.
5. The voltage of the power supply must match the voltage of the pump.
6. Before installing the pump, clear the sump basin of any water, debris, or sediment. WARNING: The sump basin must be vented in accordance with local plumbing codes. Honda WSP pumps are not designed for and CANNOT be installed in locations classified as hazardous in the National Electric Code, ANSI/NFPA 70.
7. The sump basin should be between 18" and 24" in diameter and made of plastic, fiberglass, or concrete.
8. The following may cause severe damage to the pump and will void warranty:

- Using an extension cord
- Cutting off the ground pin or using an adapted fitting
- Working on the pump or switch while plugged in
- Removing the motor housing, unscrewing the impeller, or otherwise removing the impeller seal

Piping

Plastic PVC pipe is shown in the illustrations, but galvanized steel or copper pipe may be used if desired. All piping must be clean and free of all foreign matter to prevent clogging. Use thread compound on all threaded joints unless specified otherwise.

Submersible Pump Installation

Refer to “WSP Submersible Pump Installation Diagram” on page 11 for the following instructions. Be certain the sump basin is clean and all power to the pump is shut off. If the pump fails to operate properly after installation, refer to “Troubleshooting Checklist” on page 16 or contact a Honda servicing dealer.

General Materials Needed

- One can of PVC cement (read the instructions carefully)
- One can of thread compound (read the instructions carefully)
- One male PVC adapter (1-1/4" for 1/3 HP, 1-1/2" for 1/2 and 3/4 horsepower models)
- Enough rigid PVC pipe and couplings to reach from the bottom of the sump basin to the discharge (1-1/4" for 1/3 HP, 1-1/2" for 1/2 and 3/4 horsepower models)
- One Check Valve.

Tools Needed For All Pump Installations

Pipe wrench, Slot screwdriver, 24-tooth hacksaw, knife or round file.

Step 1. Apply thread sealant and thread a male PVC adapter into the pump discharge opening.

Step 2. Cement a 15" piece of PVC pipe to the adapter. Use appropriate diameter piping. Drill a 1/8" relief hole in the pipe 5" above the pump connection. This hole prevents the pump from air-locking.

Step 3. Clamp the Check Valve to the top of the 15" PVC pipe with the water flow arrow pointing away from pump.

Step 4. Lower the pump into the basin. Clamp needed PVC discharge pipe and fittings to the open end of the Check Valve.

Step 5. Plug in the pump and fill the sump basin with water. The pump should turn on when the water level reaches 13" to 14". If it does not turn on at the 13" to 14" water level, remove the float cord from the clip and re-attach it in a higher or lower position so that the pump turns on at the 13" to 14" water level.

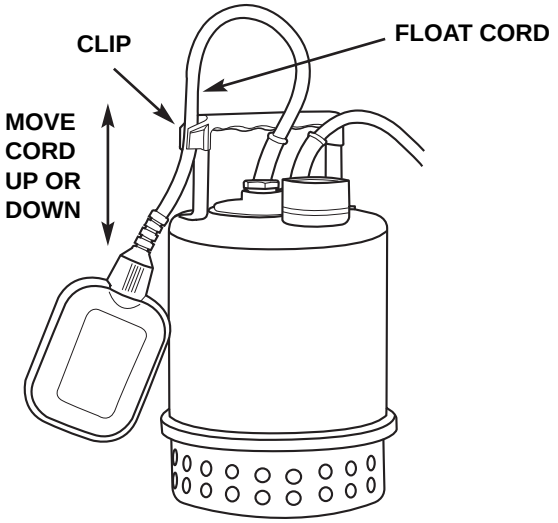

Step 6. Perform several ON-OFF cycles to assure satisfactory operation.

Performance Table (Capacity in Gallons per Minute)

Pump	Total Head									
	5	10	15	20	25	30	35	40	45	50
WSP33K1AA	40	33	25	15						
WSP53AA		73	67	60	51	40	27	9		
WSP73AA				74	67	58	49	39	27	16

WSP Submersible Pump Installation Diagram

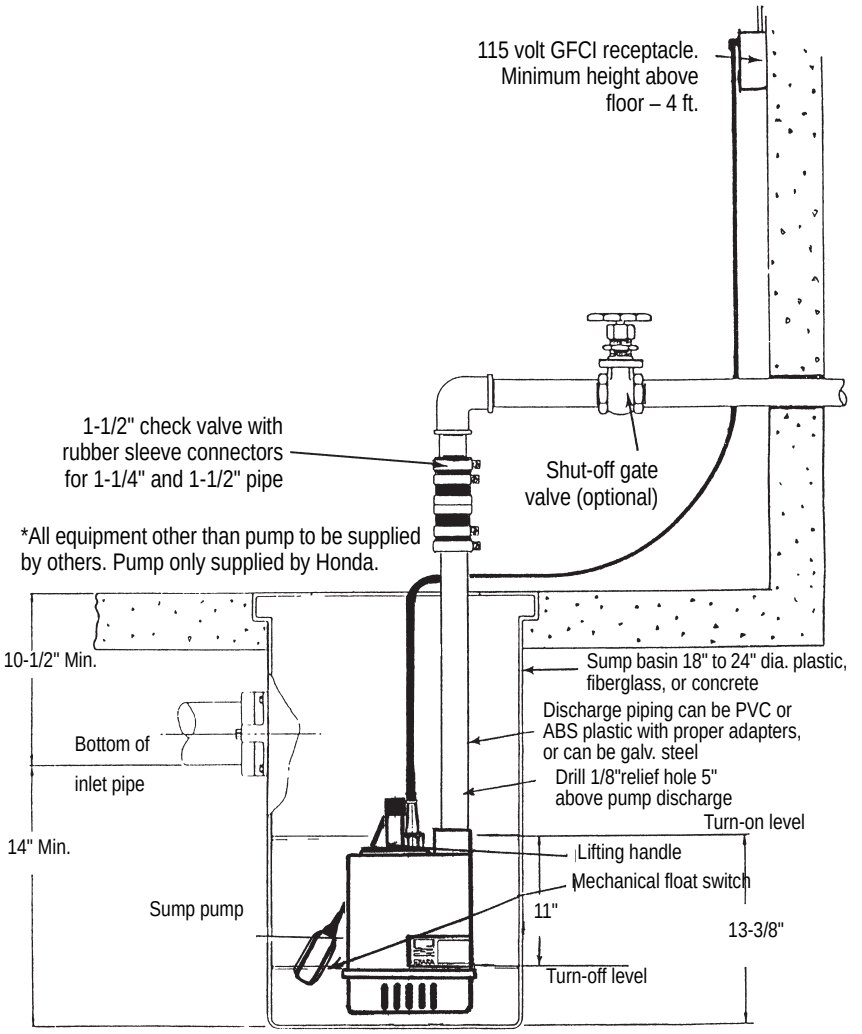

Motor Wiring Diagram

WSP33K1 Automatic Operation Type Output (Single Phase)

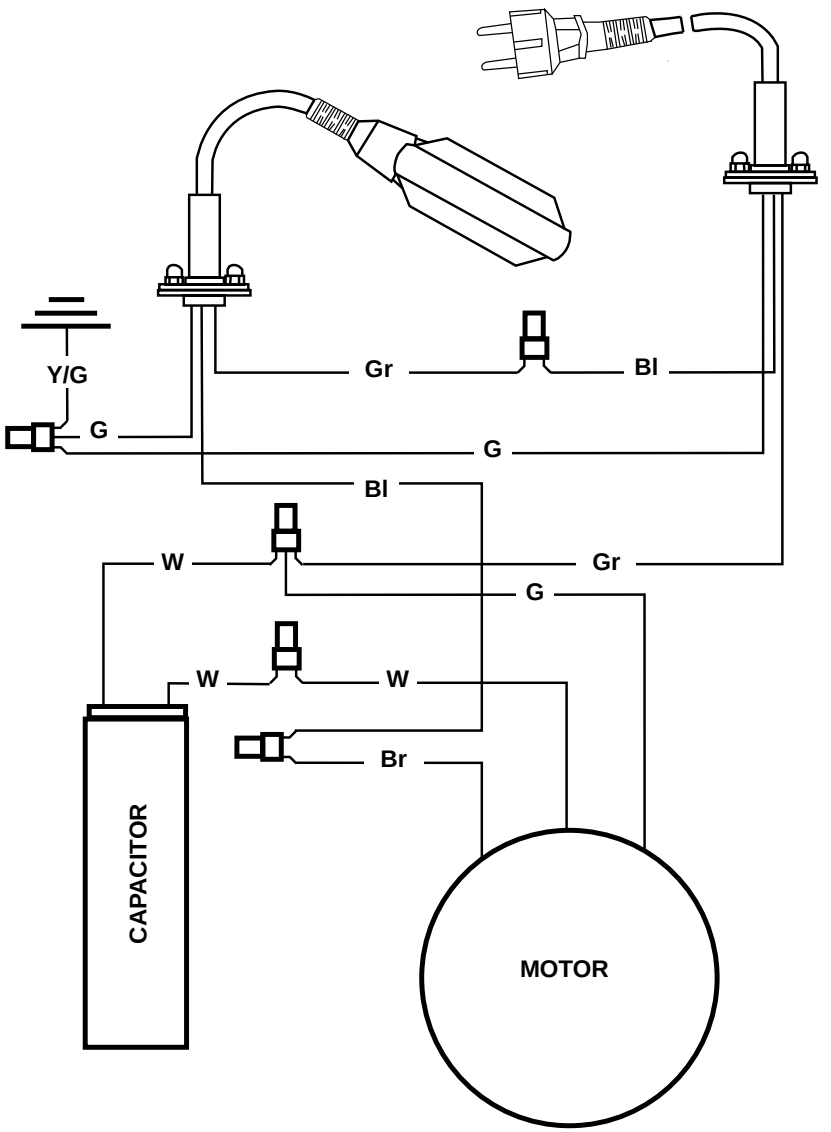

Black	Bl	Green	G
Brown	Br	White	W
Gray	Gr	Yellow/Green	Y/G

WSP53/WSP73 Automatic Operation Type Output (Single Phase)

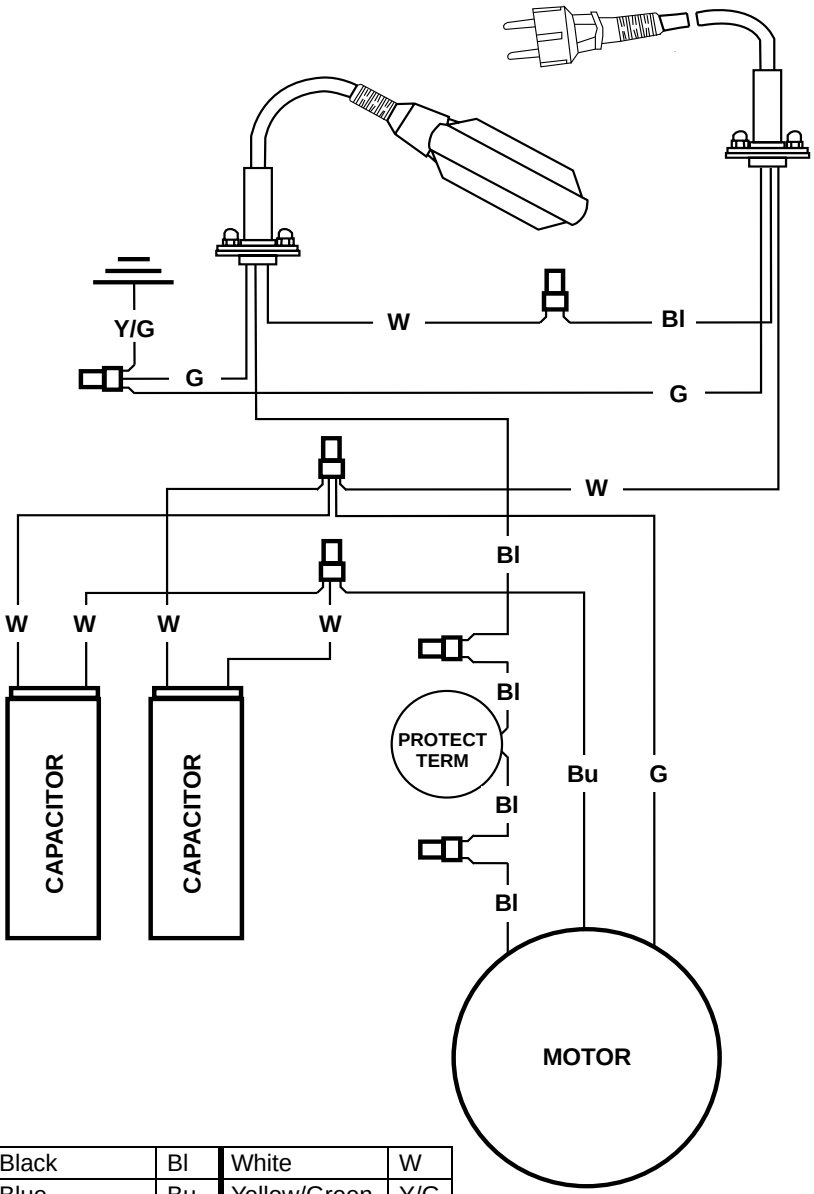

Black	Bl	White	W
Blue	Bu	Yellow/Green	Y/G
Green	G		

Operation

Check the water level before starting the pump.

If the pump is operated continuously for an extended period of time in a dry condition or at the lowest water level, the motor protector will be activated in single phase units. Constant repetition of this action will shorten pump service life. Do not start the pump again in such a situation until after the motor has completely cooled.

SPECIAL NOTICE for Cord Connected Pumps

These pumps are not designed for and CANNOT be installed in locations classified as *hazardous* in accordance with the National Electric Code, ANSI/NEPA 70-1984.

- Connection devices shall provide for a watertight connection to the power supply and provide adequate strain relief for the cord.
- Installation of the box shall be a UL listed watertight connection box used with a UL listed, liquid-tight fitting suitable for the cord.
- Connection boxes should be sized in accordance with the National Electric Code specifications and installed as intended for the application.
- All connection devices are to be provided by the installer.
- Only qualified personnel shall service and install the pump.

Technical Specifications

Model WSP33K1AA
WSP53AA
WSP73AA

Performance: ISO 2548

Item	Standard
Discharge Size	1-1/4 inch (WSP33K1AA) 1-1/2 inch (WSP53AA, WSP73AA)
Range of Performance	Capacity: up to 74 GPM Head: up to 54 feet
Maximum water temperature	122°F/50°C
Solids	3/8 in spherical (2% by concentration)
Speed	3600 RPM
Materials Casing Impeller Shaft Motor Frame Fasteners	 304L Stainless steel Thermo Plastic-Noryl GFN2 (WSP33K1AA) 304L Stainless steel (WSP53AA, WSP73AA) 303 Stainless steel 304L Stainless steel 304L Stainless steel
Shaft Seal (Double)* Material – Upper Side Material – Lower Side	 NBR Fitted Carbon/Ceramic (WSP53AA and WSP73AA) FPM Fitted Silicon Carbide/Silicon Carbide (WSP53AA and WSP73AA)
Impeller Type	Semi-Open
Bearing	Sealed Ball Bearing
Motor	Air-filled, Insulation Class F, 2 Pole, Rated Continuous Duty–Permanent Split Capacitor, 115 Volt, Single Phase
Motor Protection	Built-in Motor Protection with Auto Reset
Power Cord	UL/CSA SJTOW-A with ECS No. 250 cap plug with grounding pin, rated 15 Amp 125 V – NEMA 5-15P 50 ft. length (WSP53AA, WSP73AA) 20 ft. length (WSP33K1AA)
Automatic Float Switch	Mechanical Float
Complete Pump	UL listed

*WSP33K1AA – Shaft Seal is a single mechanical seal (lower side) and 1 lip seal (upper side). Mechanical Seal material: Carbon/Ceramic/FPM

Troubleshooting Checklist

Problem	Possible Causes
Pump does not run or hums	• Line circuit breaker is off, or fuse is blown or loose. • Water level in the sump has not reached turn-on level as indicated in the installation drawing. • Pump cord is not making contact in the receptacle. • Float is stuck. It should operate freely in the basin. • Debris may be stuck in the impeller. • If all of the above are OK, then the motor winding may be open or the capacitor may be defective.
Pump runs but does not deliver water	• Check valve is installed backwards. Arrow on the valve should point in the direction of flow. • Discharge shut-off valve (if used) may be closed. • Pump is air-locked. Start and stop several times by plugging and unplugging cord. Check for clogged vent hole in pump case. • Impeller or volute openings are fully or partially clogged. Remove pump and clean. • Inlet holes in pump base are clogged. Remove pump and clean the openings. • Vertical pumping distance is too high. Reduce distance or resize pump.
Pump runs and pumps out sump, but does not stop	• Float is stuck in the up position. Be sure the float operates freely in the basin. • Defective float switch.
Pump runs but delivers only a small amount of water	• Pump is air-locked. Start and stop several times by plugging and unplugging the cord. • Check for a clogged vent hole in the pump case. • Vertical pumping distance is too high. Reduce the distance or resize the pump. • Inlet holes in pump base are clogged. Remove pump and clean the openings. • Impeller or volute openings are fully or partially clogged. Remove the pump and clean.
Fuse blows or circuit breaker trips when pump starts	• Pump impeller is partially clogged, causing motor to run slow and overload. Remove pump and clean. • Motor stator may be defective. • Fuse size or circuit breaker may be too small. Must be 15 amps. • Impeller or volute openings are fully or partially clogged. Remove pump and clean. • Water lead inside the pump motor.

Problem	Possible Causes
Motor runs for a short time, then stops	• Inlet holes in pump base are clogged. Remove pump and clean the openings. • Pump impeller is partially clogged, causing motor to run slow and overload. Remove pump and clean. • Motor my be overheated due to water level being too low (pump not submerged). • Motor stator may be defective. • Impeller or volute openings are fully or partially clogged. Remove pump and clean.

Maintenance and Service

WARNING: Pump warranty becomes void if you remove the motor housing, unscrew the impeller, or otherwise remove the impeller seal.
If the pump does not operate properly, follow the steps shown under “Troubleshooting Checklist” on page 16.

For any work on the pump or switch, always unplug the power cord(s). Do not just turn off the circuit breaker or unscrew the fuse.

Cleaning the Float

If the pump becomes inoperative because of trash accumulation on the float, remove the pump from the sump and clean the float switch.
Wipe all water and dirt from the pump and float switch.
Be sure the float switch operates freely after cleaning.

Cleaning Impeller and Volute Case

Remove the screws that hold the lower base to the housing.
CAUTION: Do not remove the motor housing or unscrew the impeller. Use a screwdriver to pry the base from the housing. Pry in several places.
Be sure impeller turns freely after cleaning.
Clean out holes in the pump base and wash thoroughly before replacing.

Sectional View – WSP33K1AA

Automatic Type Output 1/3 HP (Single Phase)

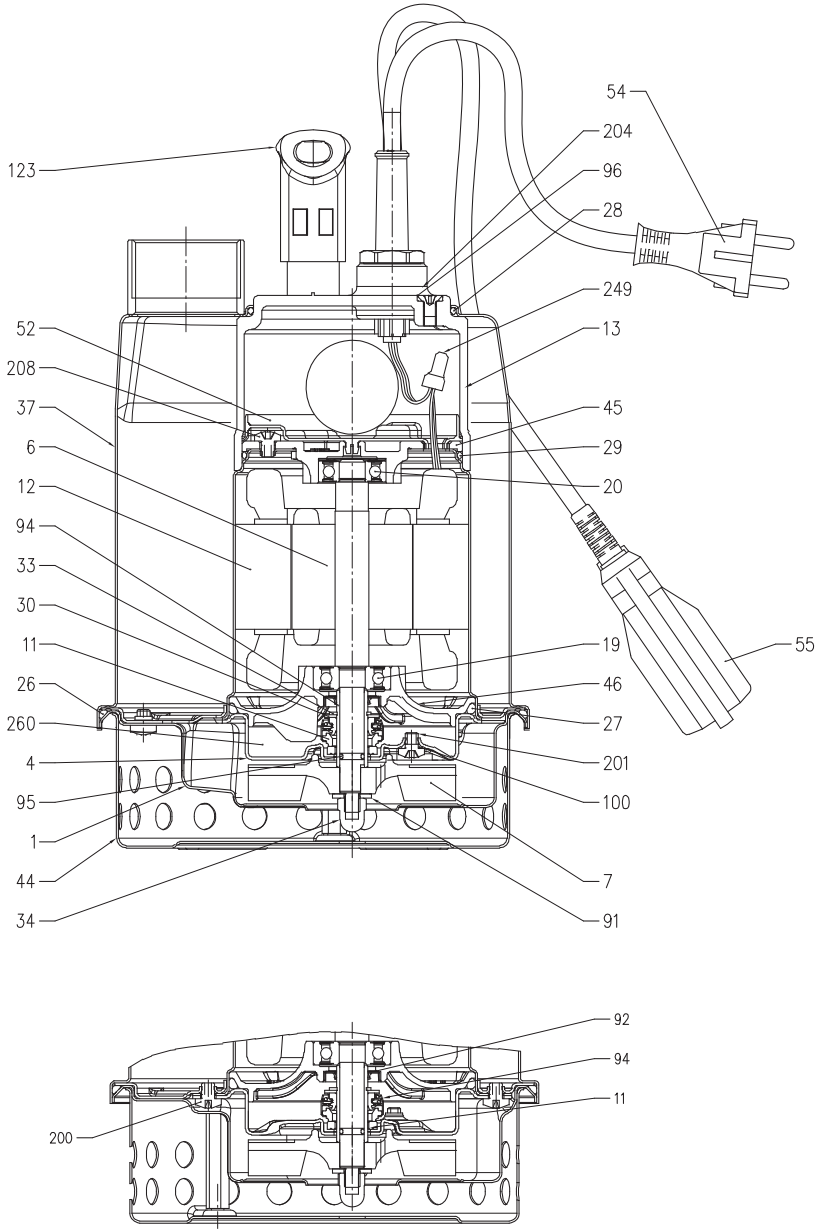

Ref No.	Part Name	Material	Standard	Quantity
1	Suction cover	EN 1.4301 (AISI 304)	—	1
4	Casing cover	EN 1.4301 (AISI 304)	—	1
6	Shaft with rotor	EN 1.4305 (AISI 303)	—	1
7	Impeller	PPE+PS-HI-GF20	—	1
11	Mechanical seal	—	—	1
12	Motor frame with stator	EN 1.4301 (AISI 304)	—	1
13	Motor cover	PP-GF30	—	1
19	Lower ball bearing	—	—	1
20	Upper ball bearing	—	—	1
26	O-ring	NBR	—	1
27	O-ring	NBR	—	1
28	O-ring	NBR	—	1
29	O-ring	NBR	—	1
30	Washer	EN 1.4301 (AISI 304)	—	1
33	Seeger ring	Carbon steel TC80	UNI 7435	1
34	Impeller nut	A2-70 UNI 7323	UNI 5721	1
37	Outer casing	EN 1.4301 (AISI 304)	—	1
44	Strainer	EN 1.4301 (AISI 304)	—	1
45	Upper bearing housing	EN 1706 AC-4600D	—	1
46	Lower bearing housing	EN 1706 AC-4600D	—	1
52	Terminal insulating base	PA6	—	1
54	Power cable	PA6	—	1
55	Switch	—	—	1
91	Washer	EN 1.4301 (AISI 304)	—	1
92	Lip seal	NBR	—	1
94	Shaft sleeve	EN 1.4305 (AISI 303) ceramic coated	—	1
95	O-ring	NBR	—	1
96	O-ring	NBR	—	1
100	O-ring	NBR	—	1
123	Handle	PP	—	1
200	Screw	A2-70 UNI 7323	UNI 7687	1
201	Screw	A2-70 UNI 7323	UNI 7687	1
204	Screw	A2-70 UNI 7323	UNI 7687	1
208	Screw	A2-70 UNI 7323	UNI 7687	1
260	Oil	Esso Marcal 152	—	40 cc

Sectional View – WSP53AA, WSP73AA

Automatic Type Output 1/2 to 3/4 HP (Single Phase)

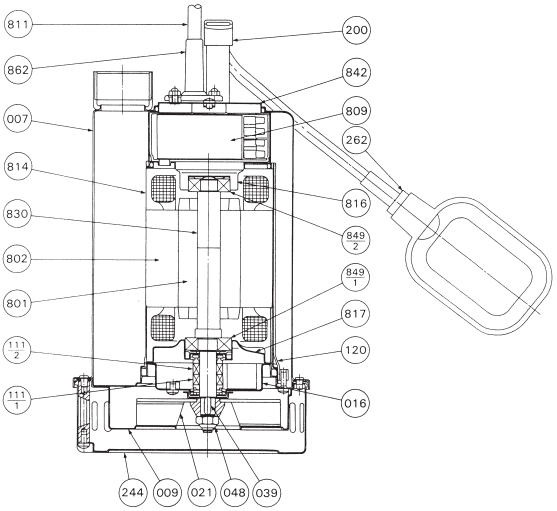

Ref No.	Part Name	Material	Code	No. for 1 Unit
007	Outer Casing	304 Stainless	AISI 304	1
009	Suction Cover	304 Stainless	AISI 304	1
016	Seal Cover	304 Stainless	AISI 304	1
021	Impeller	304 Stainless	AISI 304	1
039	Key	304 Stainless	AISI 304	1
048	Impeller Nut	304 Stainless	AISI 304	1 set
111-1*	Mechanical Seal	—		1 set
111-2*	Mechanical Seal	—		1 set
120	Connection Band	304 Stainless	AISI 304	1
200	Lifting Hanger	304 Stainless	AISI 304	1
244	Strainer	304 Stainless	AISI 304	1
262	Float Switch	—		1
801	Rotor	—		1
802	Stator	—		1
809	Capacitor	—		1
811	Submersible Cable	—		1
814	Motor Frame	304 Stainless	AISI 304	1
816	Bracket	304 Stainless	AISI 304	1
817	Bracket	304 Stainless	AISI 304	1
830	Shaft	303 Stainless	AISI 303	1
842	Motor Cover			1
849-1*	Ball Bearing	—		1
849-2*	Ball Bearing	—		1
862	Cable Boot	NBR		1

* Recommended spare parts

Disassembly and Assembly

Disassembly

When disassembling the pump, have a piece of cardboard or wooden board ready to place the different parts on as you work. Do not pile parts on top of each other. They should be laid out neatly in rows. The O-ring and gasket cannot be used again once they are removed. Have replacement parts ready.

Disassemble in the following order, referring to the sectional view. Be sure to cut off the power source before beginning disassembly.

1. Loosen the casing bolts and remove the casing.
2. Loosen the bolt at the end of the pump shaft and lift the impeller off the shaft.
3. Remove the pump shaft key and mechanical seal.
4. Loosen the inner casing bolts and remove the inner casing.

   Note 1: Drain the lubricant oil into a container.
5. Remove the mechanical seal from the main shaft.

   Note 2: Be careful not to cut your fingers on the shaft key groove when pulling out the mechanical seal.

   Note 3: Be careful not to scratch or bend the pump shaft during disassembly.

Assembly

Re-assemble in the reverse order of disassembly.
Be careful of the following points:

- Rotate the impeller by hand and check for smooth rotation
- Replace the O-ring
- Replace all parts that are damaged
- Tighten bolts evenly

Obtain O-rings and other parts from your pump dealer

Oil Capacity: 7.7 oz. (WSP53AA, WSP73AA) 1.05 oz. (WSP33K1AA)

Oil Type: White, pure mineral oil; Esso Marcol 172 for pharmacology, cosmetics, and agrifood industries

* All specifications are subject to change without notice.

Customer Service Information

Servicing dealership personnel are trained professionals. They should be able to answer any question you may have. If you encounter a problem that your dealer does not solve to your satisfaction, please discuss it with the dealership's management. The Service Manager, General Manager, or Owner can help. Almost all problems are solved in this way.

If you are dissatisfied with the decision made by the dealership's management, you may contact the Honda Power Equipment Customer Relations Office. You can call or write to:

American Honda Motor Co., Inc.
Power Equipment Division
Customer Relations Office
4900 Marconi Drive
Alpharetta, GA 30005-8847

(770) 497-6400, 9:00 am - 7:30 pm ET

When you call or write, please provide this information:

- Model and serial number
- Name of dealer who sold the pump to you
- Name and address of the dealer who services your pump
- Date of purchase
- Your name, address and telephone number
- A detailed description of the problem

Distributor's Limited Warranty

Honda Power Equipment

This warranty is limited to the following Honda Power Equipment products when distributed by American Honda Motor Co., Inc., Power Equipment Division, 4900 Marconi Drive, Alpharetta, Georgia 30005-8847, purchased at retail or placed in rental service on or after January 1, 2010.

PRODUCTS COVERED BY THIS WARRANTY	LENGTH OF WARRANTY (from date of original retail purchase)	
	PRIVATE RESIDENTIAL(1)	COMMERCIAL/ RENTAL/ INSTITUTIONAL
Electric submersible pumps	12 months	12 months

(1) Private residential: Used in maintaining owner's primary and/or secondary residence. Any other use, including but not limited to informal "for hire" use, is considered commercial/rental/institutional use.

To Qualify for This Warranty:

The product must be purchased in the United States, Puerto Rico, or the U.S. Virgin Islands from American Honda or a dealer authorized by American Honda to sell those products. This warranty applies to first retail purchaser and each subsequent owner during the applicable warranty time period, unless noted otherwise.

What American Honda Will Repair or Replace Under Warranty:

American Honda will repair or replace, at its option, any part that is proven to be defective in material or workmanship under normal use during the applicable warranty time period. Warranty repairs and replacements will be made without charge for parts or labor. Anything replaced under warranty becomes the property of American Honda Motor Co., Inc. All parts replaced under warranty will be considered as part of the original product, and any warranty on those parts will expire coincident with the original product warranty.

To Obtain Warranty Service:

You must, at your expense, take the Honda Power Equipment product, accessory, replacement part, apparel, or the power equipment on which the accessory or replacement part is installed, and proof of purchase to any Honda Power Equipment dealer in the United States, Puerto Rico, or the U.S. Virgin Islands who is authorized to sell and/or service that product, during the dealer's normal business hours. To locate a dealer near you, visit our web site at PowerEquipment.Honda.com and click on Find a Dealer.

If you are unable to obtain warranty service or are dissatisfied with the warranty service you receive, contact the owner of the dealership involved; normally this will resolve the problem. However, if you should require further assistance, write or call the Power Equipment Customer Relations Department of American Honda Motor Co., Inc. See "Customer Service Information" on page 22.

Exclusions:

1. Any damage or deterioration resulting from the following:
   - Neglect of the periodic maintenance as specified in the product owner's manual
   - Improper repair or maintenance
   - Operating methods other than those indicated in the product owner's manual
   - Increasing engine speed beyond factory specification
   - The use of non-genuine Honda parts, accessories, lubricants, and fluids other than those approved by Honda
   - Exposure of the product to soot and smoke, chemical agents, bird droppings, sea water, salt or other corrosive environments
   - Collision, fuel contamination or deterioration, neglect, unauthorized alteration, misuse, incorporation or use of unsuitable attachments or parts
   - Normal wear and tear (including, but not limited to, normal fading of painted or plated surfaces, sheet peeling, and other natural deterioration)
2. Consumable parts: Honda does not warrant parts deterioration due to normal wear and tear. The following parts are not covered by warranty (unless they are needed as a part of another warranted repair): spark plug, fuel filter, air cleaner element, clutch disc, tire, wheel bearing, recoil starter rope, cable, belt, cutter blade, oil, and grease.
3. Cleaning, adjustment, and normal periodic maintenance work (carburetor cleaning, engine oil draining, blade sharpening, belt and cable adjustments).
4. Any product that has ever been declared a total loss or sold for salvage by a financial institution or insurer.
5. Auger and paddle assemblies of snow throwers, tiller tines of roto-tillers, mower blades and mower deck housings, are specifically not warranted against impact damage, including but not limited to, abrasive damage.

Disclaimer of Consequential Damage and Limitation of Implied Warranties:

American Honda disclaims any responsibility for loss of time or use of the product, transportation, commercial loss, or any other incidental or consequential damage. Any implied warranties are limited to the duration of this written limited warranty. Some states do not allow limitations on how long an implied warranty lasts and/or do not allow the exclusion or limitation of incidental or consequential damages, so the above exclusions and limitations may not apply to you. This warranty gives you specific legal rights, and you may also have other rights which vary from state to state.

Honda Parts, Accessories, and Apparel

This warranty is limited to Honda Power Equipment parts, accessories, and apparel when distributed by American Honda Motor Co., Inc., 4900 Marconi Drive, Alpharetta, Georgia 30005-8847.

PRODUCTS COVERED BY THIS WARRANTY	LENGTH OF WARRANTY (from date of original retail purchase)	
	PRIVATE RESIDENTIAL	COMMERCIAL/RENTAL/ INSTITUTIONAL
Parts	6 months	3 months
Batteries	6 months	3 months
Accessories	12 months	3 months
Apparel	6 months	3 months

To Qualify for This Warranty:

1. The parts, accessories, or apparel must be purchased from American Honda or a dealer authorized by American Honda to sell those products in the United States, Puerto Rico, and the U.S. Virgin Islands. Parts and Accessories must be purchased for installation on original Honda equipment or engines to be eligible for warranty coverage. Installing parts and accessories on non-Honda products or engines voids this warranty.
2. You must be the first retail purchaser. This warranty is not transferable to subsequent owners.

What American Honda Will Repair or Replace Under Warranty:

American Honda will repair or replace, at its option, any Honda Power Equipment parts, accessories, replacement parts, or apparel that are proven to be defective in material or workmanship under normal use during the applicable warranty time period. Anything replaced under warranty becomes the property of American Honda Motor Co., Inc. The warranty on all parts, accessories, and apparel replaced under warranty will expire coincident with the original warranty on the replaced parts, accessories, or apparel.

Parts and accessories installed by a dealer who is authorized by American Honda to sell them will be repaired or replaced under warranty without charge for parts or labor. If installed by anyone else, parts and accessories will be repaired or replaced under warranty without charge for parts, but any labor charges will be the responsibility of the purchaser.

Apparel will be repaired or replaced under warranty without any charge.

To Obtain Warranty Service:

You must, at your expense, take the Honda Power Equipment part, accessory, apparel or the Honda Power Equipment on which the part or accessory is installed, and proof of purchase to any Honda Power Equipment dealer in the United States, Puerto Rico, or the U.S. Virgin Islands who is authorized to sell that product, during the dealer's normal business hours. To locate a dealer near you, visit our web site at PowerEquipment.Honda.com and click on Find a Dealer.

If you are unable to obtain warranty service or are dissatisfied with the warranty service you receive, contact the owner of the dealership involved; normally this will resolve the problem. However, if you should require further assistance, write or call the Power Equipment Customer Relations Department of American Honda Motor Co., Inc. See “Customer Service Information” on page 22.

Exclusions:

This warranty does not extend to parts, accessories, or apparel affected or damaged by collision, normal wear, use in an application for which the product was not designed or any other misuse, neglect, incorporation or use of unsuitable attachments or parts, unauthorized alteration, improper installation, or any causes other than defects in material or workmanship of the product. Installing parts and accessories on non-Honda products or engines voids this warranty.

Disclaimer of Consequential Damage and Limitation of Implied Warranties:

American Honda disclaims any responsibility for loss of time or use of the product, or the power equipment on which the product is installed, transportation, commercial loss, or any other incidental or consequential damage. Any implied warranties are limited to the duration of this written warranty. Some states do not allow limitations on how long an implied warranty lasts and/or do not allow the exclusion or limitation of incidental or consequential damages, so the above exclusions and limitations may not apply to you.

This warranty gives you specific legal rights, and you may also have other rights which vary from state to state.

PWL50623-X

NOTES

NOTES

NOTES

HONDA

POM31WSP629
MID.1000.2022.09



Printed on
Recycled Paper

K1 WSP33AA

K0 WSP53AA
WSP73AA

Printed in U.S.A