USER MANUAL

TURBRO

PORTABLE AIR CONDITIONER

Model:

Greenland GLP10AC-SMART

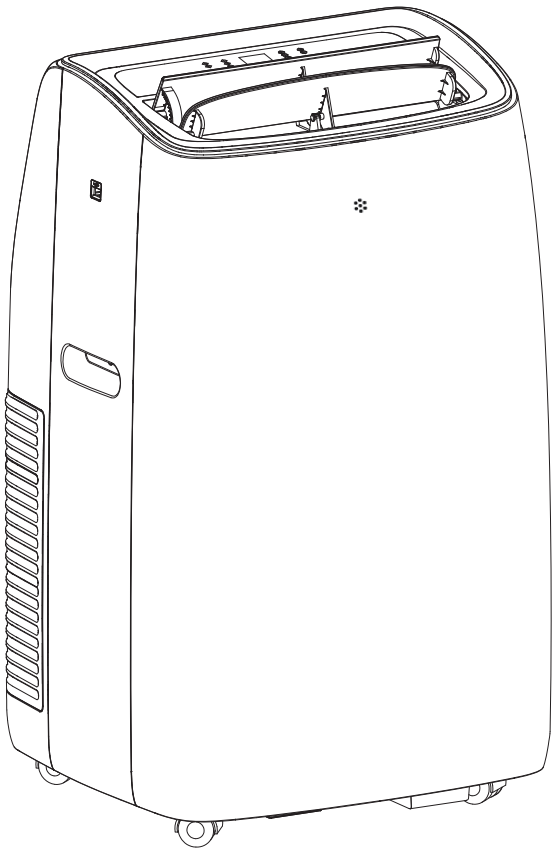

Before using TURBRO Portable Air Conditioner, please read this manual carefully and retain it for future reference.

Tips for First-Time Use

1. Allow the unit to sit upright for at least 3-4 hours before powering on. Shipping carriers may set the unit on its side, which causes the refrigerant to pool in certain areas. Standing the unit upright for 3-4 hours allows the refrigerant to move freely within the coils.
2. Some parts with sharp edges may cause injury, so gloves are highly recommended for unpacking and installing.
3. Run the unit continuously for 24 hours after letting the unit stand upright for 3-4 hours. This allows the unit to work out any “kinks” that may have resulted during shipping from our factory to your doorstep.
4. If you have any difficulties during installation, please contact Customer Support Team via support@turbro.com for help.
5. If you have any problems with your product, please send us an email before submitting a return request, as there might be a simple solution for your issue.

Please read this operating manual carefully before operating the unit.

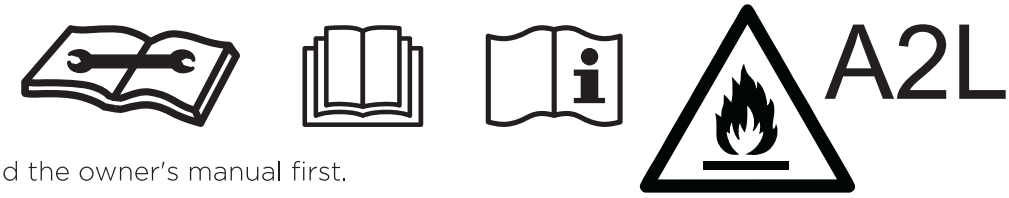

Caution: Risk of fire.

Before use the appliance, read the owner's manual first.

Before install the appliance, read the installation manual first.

Before repair the appliance, read the service manual first.

The figures in this manual may be different with the material objects, please refer to the material objects for reference.

The Refrigerant

To realize the function of the air conditioner unit. A special refrigerant circulates in the system. The used refrigerant is the fluoride R32, which is specially cleaned. The refrigerant is flammable and inodorous. Furthermore, it can lead to explosion under certain conditions. But the flammability of the refrigerant is very low. It can be ignited only by fire.

Compared to common refrigerants, R32 is a nonpolluting refrigerant with no harm to the ozonosphere. The influence upon the greenhouse effect is also lower. R32 has got very good thermodynamic features which lead to a really high energy efficiency. The units therefore need a less filling.

⚠ WARNING

1. Keep ventilation openings, in the appliance enclosure or in the built-in structure, clear of Obstruction.
2. Do not use means to accelerate the defrosting process or to clean, other than those recommended by the manufacture. Should repair be necessary, contact TURBRO Customer Service Team.
3. Any repairs carried out by unqualified personnel may be dangerous.
4. Do not pierce or burn.
5. Appliance shall be installed, operated and stored in a room with a floor area larger than 21.5ft² (2m²).
6. Appliance filled with flammable gas R32. For repairs, strictly follow manufacturer's instructions only. Be aware that refrigerant not contain odor.
7. Read specialist's manual.

CONTENTS

SAFETY INFORMATION 01

PARTS DESCRIPTION 03

INSTALLATION INSTRUCTIONS 04

- Installation Location 04
- Tool Suggested 05
- Installing in Double-Hung Sash / Sliding Casement Windows 05
- Installing Exhaust Hose 07

OPERATING INSTRUCTIONS 08

- Control Panel 08
- Operating from the Control Panel 08
- Operating from the Remote Control 11
- Operating from the APP 13
- Self-Diagnosis 14
- Water Drainage Methods 14
- Tips for Correct Use 15

CLEANING 16

- Cleaning the Outer Case 16
- Cleaning the Air Filters 16
- Maintenance Checklists 17

TROUBLESHOOTING 17

WARRANTY & CUSTOMER SUPPORT 19

- Warranty Information 19
- Customer Support 19

SAFETY INFORMATION

Please read all instructions before use and save this user manual for future reference. A digital version can be obtained from Customer Support.

Your safety and the safety of others are very important to us. We have provided many important safety messages throughout this manual and on the appliance itself. Always read and follow all posted safety messages.

To reduce the risk of fire, electric shock, injury, or death to persons using or near this appliance, please follow some basic safety precautions. These precautions include, but are not limited to, the following:

Installation and Setup

- This appliance is not intended for use by any persons (including children) with reduced or restricted physical, mental, or sensory capabilities, or lack of experience and knowledge, unless under the direct supervision of a person responsible for their safety.
- Please keep plastic bags and sheets out of the reach of children as they might be mistakenly used for play. Packaging materials can become airtight chambers and may pose a risk of suffocation if not disposed of properly.
- When installing or moving the appliance, be careful not to pinch, crush, or damage the power cord.
- Never attempt to operate this appliance if it visibly damaged, malfunctioning, disassembled or has missing or broken parts. This includes exposed wiring on a damaged cord or electrical plugin. All repairs and servicing must be performed by qualified service personnel. Use only authorized TURBRO factory OEM parts.
- Keep the product away from fire. Do not store or use flammable gases or materials near the appliance.
- Do not use heating equipment near the appliance.
- In the event of a gas leak (propane gas, LP gas, etc.) do not operate this or any other appliance. Open a window or door to ventilate the area immediately.
- Only use the appliance in an upright position. Make sure the angle of inclination<10°. Always place the appliance on a stable, flat, level surface to prevent the air conditioner from overturning.

Electrical Safety Warning

- Always plug into a fixed 115V AC ground outlet.
- Push the power plug all the way into the wall outlet so that it will not loose.
- Never plug or unplug the appliance with wet hands.
- Always grip the plug firmly and pull straight out from the outlet when taking it out.
- Never unplug the appliance by pulling on the power cord.
- Never use the appliance if the outlet is damaged or loose.

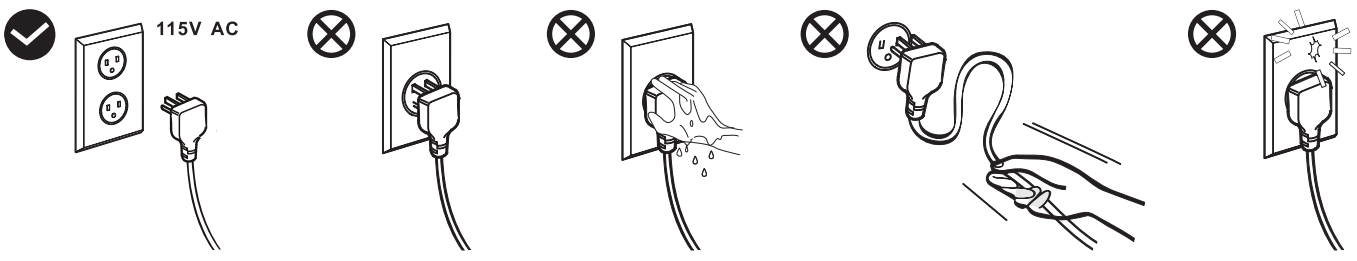

- This product should be plugged directly into a power outlet. Power outlets should be properly rated, protected, and sized in order to avoid electrical overload. Do not use a multiple-outlet power strip or extension cord. Failure to do so may result in short-circuit or electrical shock.
- Do not use an AC plug adapter with this appliance.
- Do not cut or remove the third (ground) prong from the power cord.

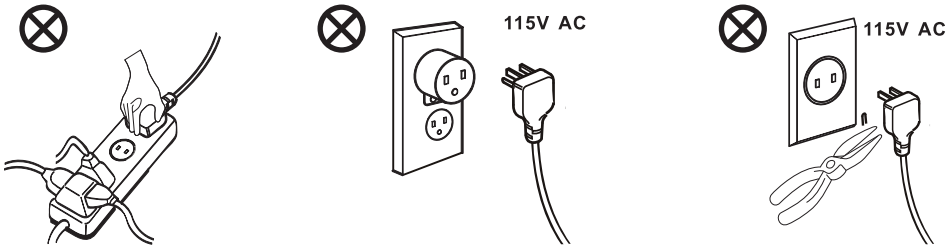

- Your air conditioner must be used in a properly grounded wall receptacle. If the wall receptacle you intend to use is not adequately grounded or not protected by a time-delay fuse or circuit breaker, have a qualified electrician install the proper wall power receptacle before using this appliance.
- Be sure that the air conditioner is properly grounded. To minimize shock and fire hazards, proper grounding is important. The power cord is equipped with a three prong grounding plug for protection against shock hazards.
- Do not cover the power cord with a rug or carpeting.
- Do not rest hot or heavy objects on the appliance and power cord.
- If the power cable is damaged, it must be replaced by the manufacturer or an authorized technical service center in order to avoid all risk.
- Do not damage, alter, excessively bend, twist, pull or heat the power cord.
- Do not run the air conditioner without the white plastic shell in place. This could result in mechanical damage within the air conditioner.
- During the installing or moving the appliance, be careful not to pinch, crush, or damage the power cord.
- Always unplug the unit from the outlet before cleaning or maintenance operations.

Power Cord Operation (LCDI Plug)

The power cord used with this air conditioner contains a current detection device designed to reduce the risk of fire. Always finish the test of LCDI (Leakage Current Detection and Interruption) plug before use:

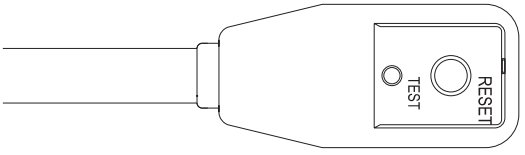

1. Plug in the Air Conditioner.
2. The power supply cord head has two buttons, a TEST button and a RESET button. Press the TEST button and notice a click as the RESET button pops out.
3. Press the RESET button. Once again notice a click as the button engages.
4. The power supply cord will now supply electricity to the unit.

⚠ WARNING **If the TEST button does not cause the circuit breaker trip or the RESET button will not stay engaged, unplug air conditioner immediately and contact TURBRO Customer Support.**

NOTE:
- Do not use this device to turn the unit on or off.
- Always make sure the reset button is pushed in for correct operation.
- The power cord must be replaced if it fails to reset when either the test button is pushed, or it cannot be reset.
- If power supply cord is damaged, it cannot be repaired. It must be replaced by one obtained from manufacturer.

PARTS DESCRIPTION

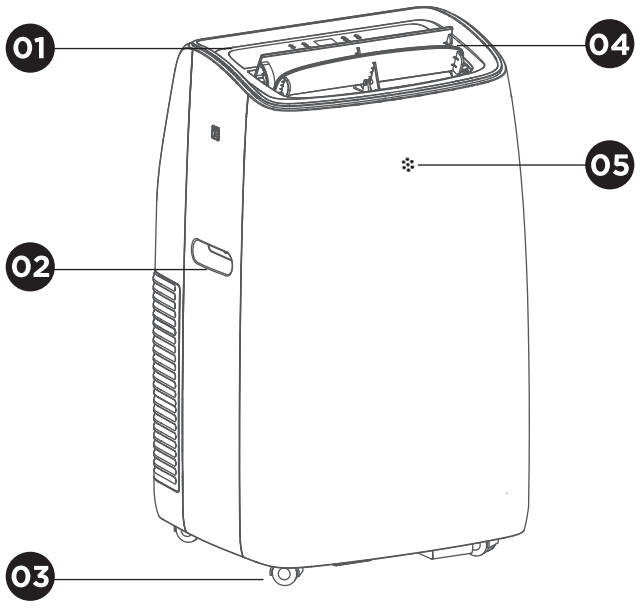

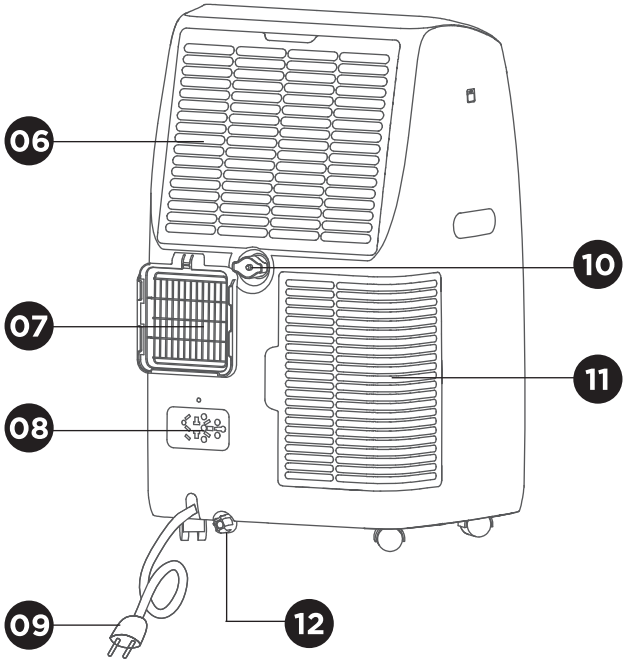

01 Control Panel
02 Handle(both sides)
03 Castors
04 Deflector
05 Remote Control Receiver
06 Air Intake Grille
07 Air Outlet Grille
08 Plug Storage Socket
09 Power Cord
10 Middle Condenser Drain
11 Air Intake Grille
12 Condenser Drain

PARTS	PARTS NAME	QUANTITY
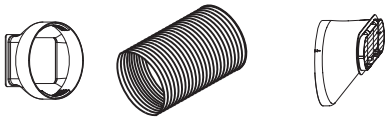	Hose Inlet Exhaust Hose Hose Outlet	1 set
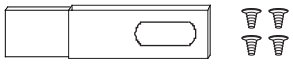	Window Panel + Extension Panel Metal Locking Screw	1 set
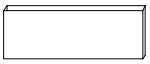	Adjustment Panel without Hole	1 set
	Remote Control Battery	1 set
	Drainage Hose	1 set
	Foam Seal	1 set

INSTALLATION INSTRUCTIONS

Installation Location

- The air conditioner should be placed on a firm floor to minimize noise and vibration. For safe and secure positioning, place the unit on a smooth, level floor strong enough to support the unit.
- The unit must be installed near a properly rated grounded socket.
- Allow at least 19.7 inches / 50 cm of space away from the wall with the window for efficient working.
- Never place any obstacles around the air inlet or outlet of the unit.
- The hose can be compressed or extended moderately, but it is desirable to keep the length to a minimum. Also make sure the hose does not have any sharp bends or sags.

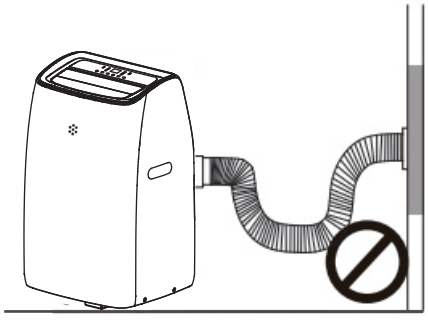

NOT RECOMMENDED

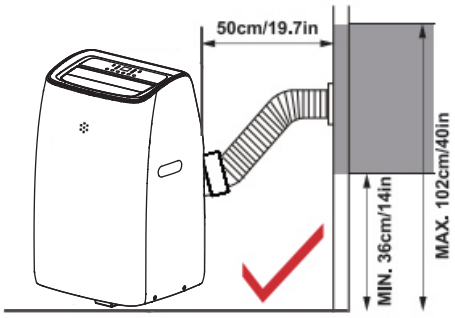

RECOMMENDED

Tool Suggested

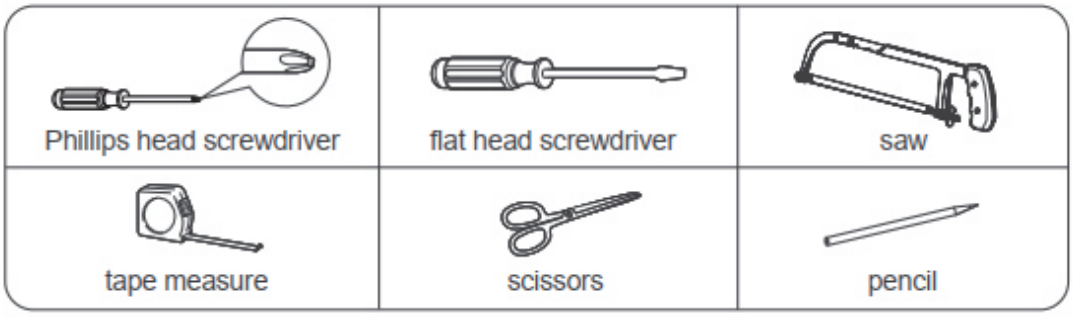

The window panel kit has been designed to fit most standard windows that open vertically or horizontally; however, it may be necessary for you to improvise/modify some aspect of the installation procedures for certain types of window.

Minimum and maximum window openings: 9 - 59 Inches

NOTE:

If the width of your window is smaller than 20.5 inches, please remove the adjusting panel from the window panel and then cut the window panel to make the width of the window panel the same width as your window.

Installing in Double-Hung Sash / Sliding Casement Windows

A. Required Parts:

- Foam Seal
- Window Panel with Hole
- Adjustment Panel without Hole
- Extension Panel
- Metal Locking Screw

B. Assembly:

a. Cut the foam seal to the proper length and attach it to the window sash.

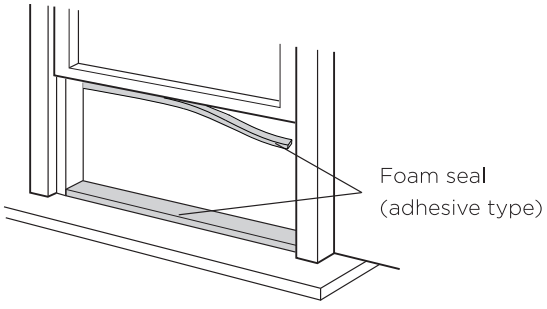

b. Slide Adjustment Panel 02 into the Window Panel with Hole 01 and Extension Panel 03

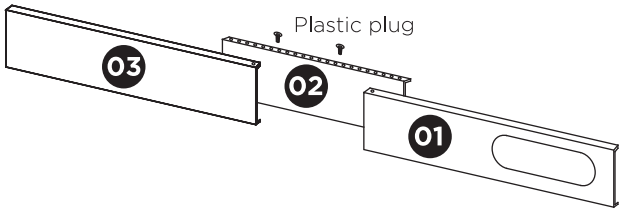

NOTE:

A plastic locking pin is holding the window panel kit together during shipment. Prior to installation, remove the plastic locking pins.

c. Place the assembled window panels on the window sash and adjust until it fully covers the width of your window.

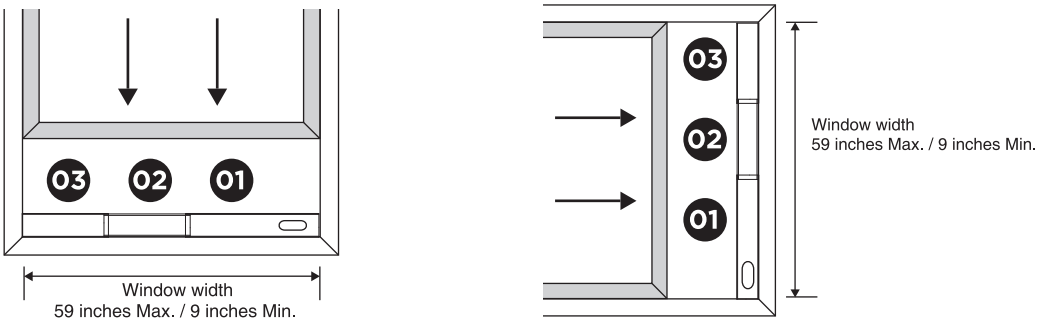

NOTE:

If the width of your window is smaller than 20.5 inches, please remove the adjusting panel from the window panel and then cut the window panel to make the width of the window panel the same width as your window.

d. Use the provided metal locking screws to secure the window panel kit.

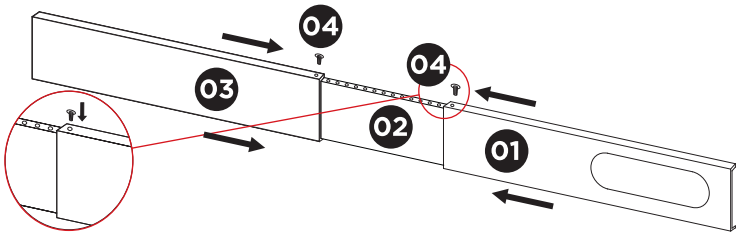

e. Close the window securely against the assembled window panel kit.

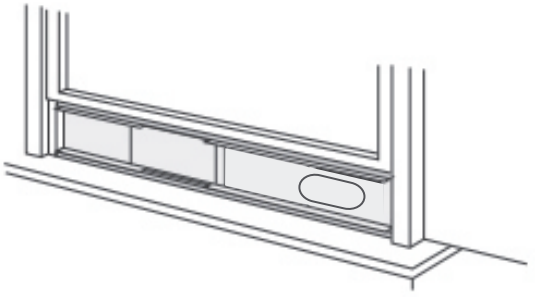

f. Cut the foam seal to an appropriate length and seal the open gap between the top window sash and outer window sash.

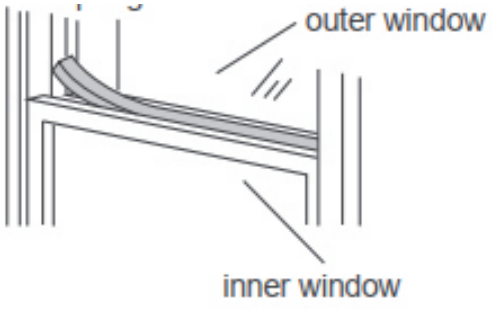

Installing Exhaust Hose

COOL & DEHUMIDIFY: Air exhaust hose should be connected to the portable air conditioner.
FAN MODE: Air exhaust hose should be disconnected from the portable air conditioner.

A. Required Parts:

- Hose Inlet
- Exhaust Hose
- Hose Outlet

B. Assembly:

a. Align both the arrows of the Hose Inlet connector and the Exhaust Hose, then rotate the Hose Inlet clockwise or counter-clockwise to lock into place. (see Fig. 1)

b. Use the same way to attach the Hose Outlet and the Exhaust Hose.

c. Fig. 2 is the assembled exhaust hose.

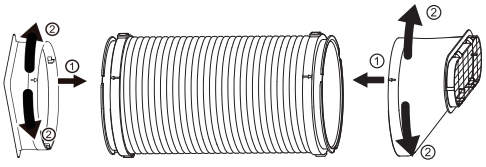

Fig. 1

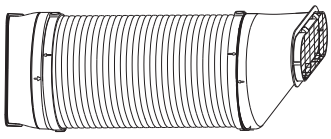

Fig. 2

d. Install the Hose Inlet into the groove at the back of the unit and extend the exhaust hose. (see Fig. 3)

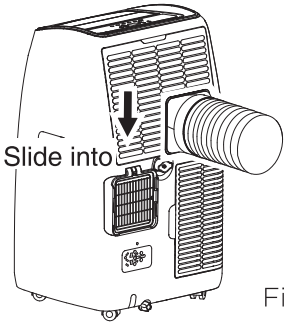

Fig. 3

e. Affix the Hose Outlet to the window panel. (see Fig. 4)

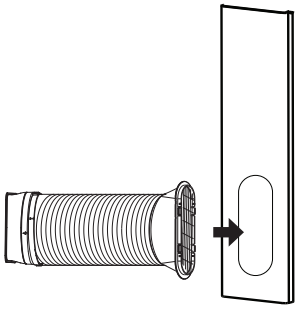

Fig. 4

NOTE: The exhaust hose can be compressed or extended moderately, but it is desirable to keep the length to a minimum. Also make sure that the hose does not have any sharp bends.

OPERATING INSTRUCTIONS

Control Panel

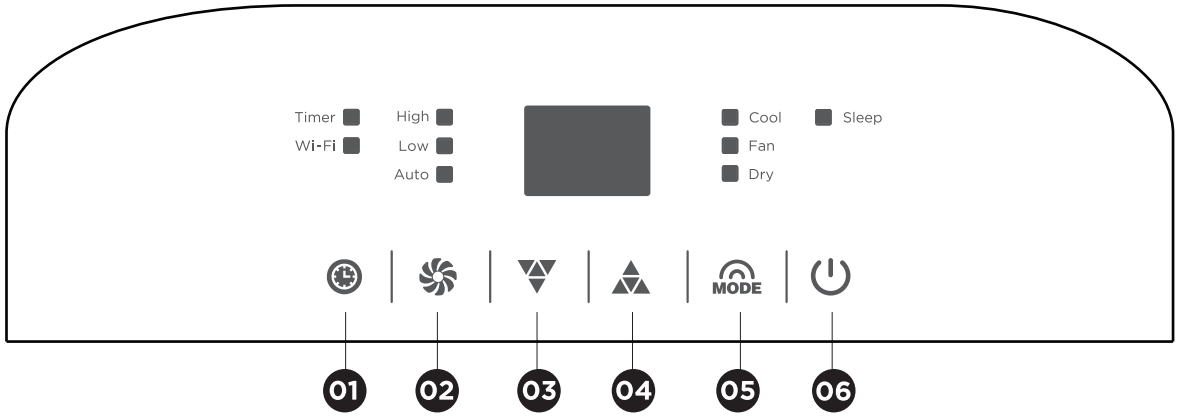

01 **Timer Button**

02 **Fan Speed Button**

03 **Decrease Button**

04 **Increase Button**

05 **Mode Button (Wi-Fi Reset)**

06 **ON/OFF Button**

Operating from the Control Panel

The Control Panel enables you to manage all the main functions of the appliance, but to fully exploit its potential, you must use the remote control.

TURNING THE APPLIANCE ON

- Plug into the mains socket, then the appliance is in standby.
- Press the ON/OFF Button ⏻ then the display screen will light up.
- Never turn the air conditioner off by unplugging from the mains. Always press the ON/OFF Button ⏻, then wait for a few minutes before unplugging. This allows the appliance to perform a cycle of checks to verify operation.
- Pressing Mode Button MODE will cycle through the following modes, as shown below:

COOL ▶ DRY ▶ FAN ▶ AUTO

COOL MODE

Ideal for hot muggy weather when you need to cooling and dehumidify the room.

NOTE: Before using the Cool Mode, please make sure the air exhaust hose attached to the appliance.

- Press the Mode Button MODE until the 'Cool' indicator lights up. Also, the screen will appear .
- Press the ▲ or ▼ button to select your desired temperature 64ºF-90ºF (18ºC-32ºC).
- Press the Fan Button to select the fan speed.

High	To reach the desired temperature as rapidly as possible.
Low	To operate under low noise.
Auto	To run at a suitable fan speed automatically.

NOTE: After reaching the set temperature, the compressor will stop working. Then the fan will work intermittently to help circulate air. When the temperature rises, the compressor will be back on.

DRY MODE

Ideal to reduce room humidity (spring and autumn, rainy periods or in damp rooms, etc).

NOTE: Before using the dry mode, please make sure the air exhaust hose attached to the appliance to allow the moisture to be discharged externally and the drain hose attached to avoid any leaking. (The Water Drainage Methods will be mentioned in the following parts)

- Press the Mode Button MODE until the 'Dry' indicator lights up. Also, the screen will appear .
- In this mode, the fan speed is selected automatically and can not be set manually.

FAN MODE

When using this mode, the unit doesn't need to be attached with the air exhaust hose.

- Press the Mode Button MODE until the 'Fan' indicator lights up.
- Press the Fan Button to select the fan speed.

FAN SPEED	SYMBOL	FAN SPEED	SYMBOL
High		Low	

NOTE: In Fan Mode, the difference among the fan speeds is more noticeable than under COOL MODE.

AUTO MODE

The unit operates automatically in Cool or Fan Mode depending on the room temperature.

ROOM TEMPERATURE	OPERATION MODE
Below 73°F (23°C)	FAN MODE
Above 73°F (23°C)	COOL MODE

- Press the Mode Button MODE until the 'Auto' indicator lights up. Also, the screen will display like below:

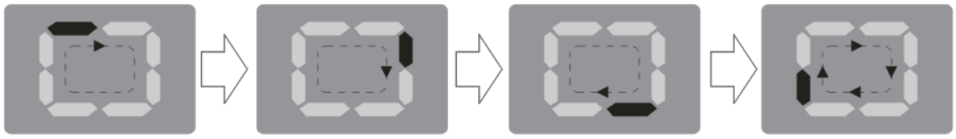

- Press the Fan Button to select the fan speed: High / Low / Auto

TIMER FUNTION

This timer can be used to delay the unit start up or shutdown, this avoids wasting electricity by optimizing operating periods.

Programming start up

- Press the ON/OFF Button to turn on the unit and choose your desired mode, for example 'cooling, 68°F and high fan speed'. Then press the ON/OFF Button again to turn off the unit.
- Press the Timer Button, the timer indicator and the screen digital will flash. Press the / to the required delayed start-up time and wait for about 5 seconds. When the timer is active, the 'Timer' indicator will keep stay on and the screen will display.
- Press the Timer Button again, the timer will be canceled, and the 'Timer' indicator will disappear.

Programming shut down

- With the unit on, please press the Timer Button, the timer indicator and the screen digital will flash. Press the / to the required delayed shut-down time and wait for about 5 seconds. When the timer is active, the'Timer' indicator will keep stay on and the screen will display your set temperature.
- Press the Timer Button again, the timer will be canceled, and the 'Timer' indicator will disappear.

TEMPERATURE SCALE CONVERSION

With the unit on, hold on the Increase Button and Decrease Button together for 3 seconds at the same time, then you can switch the unit of temperature.

For example:
—In Celsius degree, the digital displays like fig1.
—In Fahrenheit degree, the digital displays like fig2.

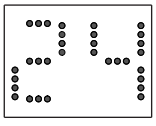

fig1

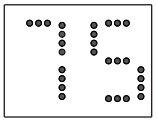

fig2

Operating from the Remote Control

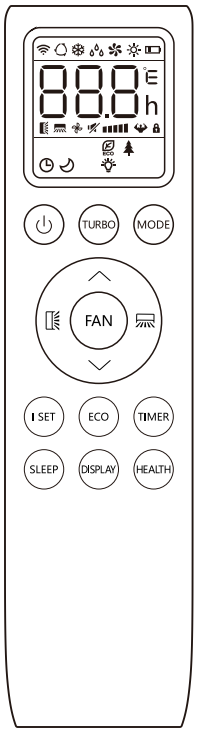

BUTTONS	FUNCTION
⏻	To turn on/off the air conditioner
MODE	To select the operation mode.
∧	To increase the setting temperature; to lengthen the time in TIMER setting
∨	To decrease the setting temperature; to reduce the time in TIMER setting
	To adjust the air flow direction vertically
FAN	To adjust the fan speed
TURBO	To switch on/off the TURBO mode; to change the temperature scale
TIMER	To switch on/off the TIMER function
SLEEP	To switch on/off the SLEEP mode
∧ & ∨	To activate the Child Lock, press ∧ and ∨ buttons together for more than 3 seconds.
	Not available for this model
I SET	Not available for this model
ECO	Not available for this model
DISPLAY	Not available for this model
HEALTH	Not available for this model



SYMBOLS	MEANING	SYMBOLS	MEANING
	AUTO MODE		FAN SPEED icon
	COOL MODE		FAN SPEED: LOW / HIGH
	DRY MODE	(FLASH)	AUTO FAN
	FAN MODE		TIMER
	Not available for this model		SLEEP MODE
	BATTERY		TURBO
	FLAP SWING		CHILD LOCK
88.8h	TEMPERATURE/ CLOCK	ECO	Not available for this model

The following functions only can be active by using the remote:

SWING FUNCTION

This function is useful for selecting the up/down swing of air circulation.



- Select the operating mode (Cool, Dry, Fan) as described above.
- Press the Swing Button on the remote to control the deflector to swing automatically or not.

SLEEP FUNCTION

This function is useful to use at night as it maintains the room at optimum temperature silently without excessive fluctuations in either temperature or humidity.

NOTE:

- This function can only be used in Cool Mode.
- In this mode, the fan speed is always at low.
- Select the Cool mode as described above.
- Press the Sleep Button on the remote and then the symbol will appear on the display screen.
- The unit operates in the previously selected mode, the screen will reduce the brightness, and the fan will switch to low speed.

  When in Cool Mode, the selected temperature will increase automatically by 1ºF (1ºC) per hour during the first 2 hours. Then the unit will maintain the latest temperature for the next 6 hours and turn off automatically after that.
- The Sleep Function can be canceled at any time during operation by pressing the following buttons: **'FAN'** or **'MODE'** or **'SLEEP'**.

TURBO FUNCTION

This function is ideal for cooling the room in the shortest time. When this function is active, the unit will be set to COOL MODE, 64ºF (18ºC) and high fan speed automatically.

- To activate turbo function, press the **'TURBO'** button, and will appear on the display.
- In COOL mode, when you select TURBO feature, the appliance will operate the fast cooling with the highest fan speed.
- To cancel this function, press buttons like **'TURBO'** or **'MODE'** or **'FAN'**.
- Press **'TURBO'** button for 3 seconds to switch the temperature scale.

TIMER FUNCTION

- Press the **'TIMER'** button one time, the timer indicator, and the screen digital will flash on the remote control.
- Choose the required delayed time by pressing the and buttons. Then press the **'TIMER'** button again and wait for about 5 seconds. The timer will be activated, the timer indicator will stay on and the screen will display your set temperature.
- Press the **'TIMER'** button twice to deactivate the timer function.

Using the remote

The maximum range of the remote control is 23 feet / 7 meters away from the appliance (without obstacles between the remote control and the receiver).

The remote control must be handled with extreme care. Do not drop it or expose it to direct sunlight or sources of heat. If the remote control do not work, please try to take out the battery, and put it back.



Inserting or replacing the batteries

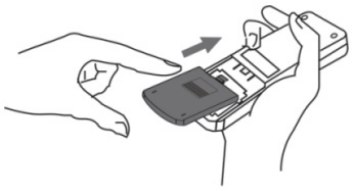

- Remove the cover on the rear of the remote control
- Insert two "AAA" 1.5V batteries in the correct position (see instructions inside the battery compartment)

NOTE:

- If the remote control unit is replaced or disposed of, the batteries must be removed and discarded in accordance with current legislation as they are harmful to the environment.
- Do not mix old and new batteries. Do not mix alkaline, standard (carbon-zinc) or rechargeable (nickel-cadmium) batteries.
- Do not dispose of batteries in fire. Batteries may explode or leak.
- Remove the batteries if the remote control won't be used for a long time.

Operating from the APP

This model is equipped with the Wi-Fi function. Using the AIR.ai APP you can control air conditioner via an iPhone or Android smart phone anywhere, even outside of your home, office and etc. Please scan the QR code below or search 'AIR.ai' on App Store or Google Play and download the app.

- Supported wireless routers must working with operating frequency: 2.4 GHz
- Standard: IEEE 802.11b/g/n
- Supported smart phone system: Android 6.0 or later
  iOS 11 or later

- Before connecting to the unit, please make sure the device is plugged in and in stand-by mode (not powered on).
- Then you can connect this device with the AIR.ai app. **Please refer to the Quick Guide for the AIR.ai app connection guide.**
- If it is connected successfully, the Wi-Fi indicator light on the control panel will illuminate.
- If you have difficulty connecting to the Wi-Fi, you can press MODE button for 3 seconds to reset the Wi-Fi signal. After that, the appliance will 'beep' twice and the Wi-Fi indicator light will switch on/off.

NOTE:

- The APP is only compatible with smart phones and is not available for laptops or tablets.
- APP may not support the latest version of Android or iOS system because of the test of stability. Also may not compatible with tampered Android or iOS system.
- Due to different network situation, sometimes, request time-out could happen, it is necessary to do network configuration again.
- Due to different network situation, the control process may return time-out(30S-60S) sometimes.
- All the illustrations in the manual are for explanation purpose only. The latest APP may be slightly different. The actual shape shall prevail.
- The APP will continue to be updated with design and content improvements. Check for update at the Google Play Store or the APP Store.

Self-Diagnosis

This unit has a self diagnosis system to identify a number of malfunctions. Error messages will be displayed on the display screen.

IF IS DISPLAYED	WHAT SHOULD I DO?
 PROBE FAILURE (sensor damaged)	● If this is displayed, contact TURBRO service team.
 FULL TANK (safety tank full)	● Empty the internal safety tank, following the instructions in the "WATER DRAINAGE METHODS"

Water Drainage Methods

TURBRO portable air conditioner comes with the auto-evaporation system. The unit can automatically evaporate the condensate. There is no need to empty the water except in humid conditions. When you run the dry mode, then it's required to install the hose as the unit might pull more water from the air.

When the water tank is full with water, the unit stops running and shows "  " (FULL TANK as mentioned on SELF-DIAGNOSE). The compressor and fan won't restart until the water tank has been drained.

There are 2 ways to remove collected water from the air conditioner.

Method A: Manual Drainage

a. Unplug the unit from power source.

b. Place a receptacle pan (does not include) under the lower drain port.

c. Remove the cap from the lower drain port and allow the water to flow into the pan. Your pan may not hold the full contents of the water tank. A number of fills of your pan may be required.

d. Tilt the unit by lifting it slightly upwards from the front until no more water drains from the outlet.

e. After the water is drained, replace the cap on the lower drain firmly.

f. Restart the air conditioner by pressing the power button. Ensure that the unit is in COOL or DRY mode. The compressor will start approximately 3 minutes after the unit is turned on.

Method B: Continuous Draining

a. Unplug the unit from power source.

b. Remove the drain cap from the lower or middle drain port. During this step, some residual water may spill so place a receptacle pan (does not include) under the drain port to collect the water.

c. Insert the 1/2" drain hose into the drain port. The water can be continuously drained through the hose to the floor or a bucket.

NOTE: If you find it hard to insert the hose, please use a hairdryer or some hot water to soften the drain hose before installation.

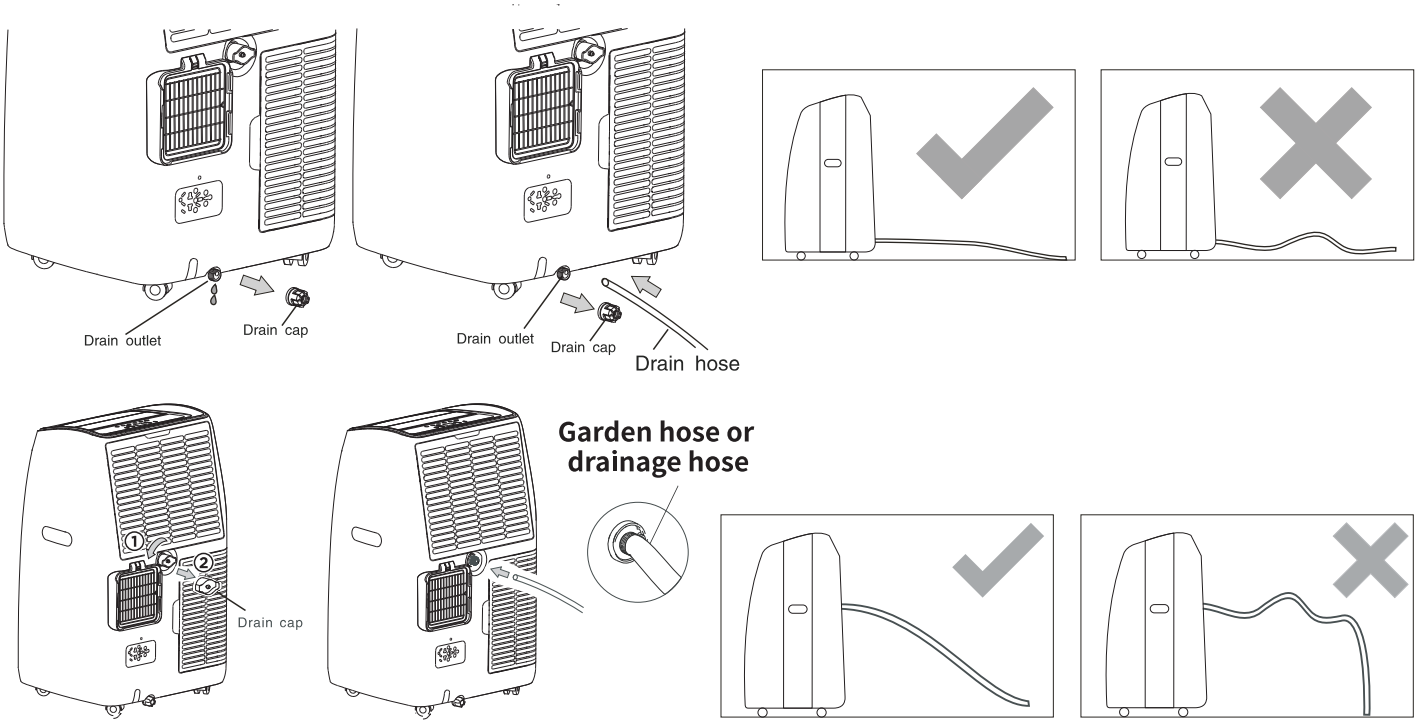

NOTE: Please be sure that the height of and section of the drain hose should not be higher than that of the drain outlet, or the water tank may not be drained.

NOTE: In COOL mode and DRY mode, the drainage hose is recommended to be connected to the middle drain port.

Tips for Correct Use

Follow these tips to get the best performance of your appliance:

- Close the windows and doors in the room to be cooling. When installing the appliance semi-permanently, you should leave a door slightly open (as little as 0.4 inches / 1 cm) to guarantee correct ventilation
- Close the windows and doors in the room to be cooling. When Protect the room from direct exposure to the sun by partially closing the curtains and blinds to make the appliance much to run more economically.
- Never rest objects of any kind on the appliance.
- Do not block the air inlet or outlet of the appliance. Reduced air flow will result in poor performance and could damage the unit.
- Make sure there are no heat sources in the room.
- Never use the appliance in very damp rooms (for example laundries).
- Never use the appliance outdoors.
- Make sure the appliance is standing on a level surface.

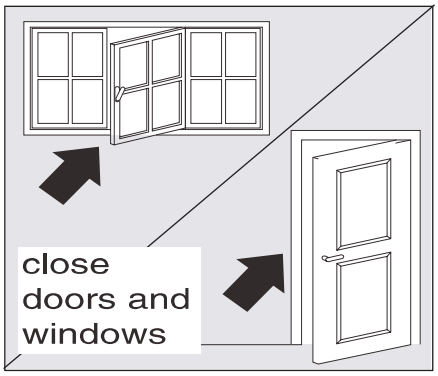

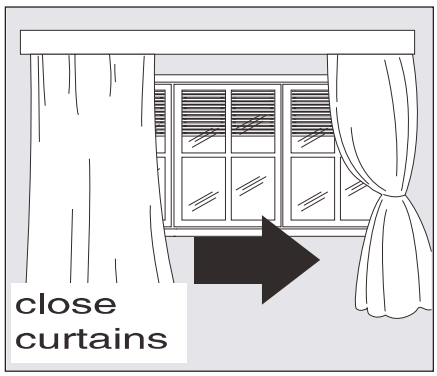

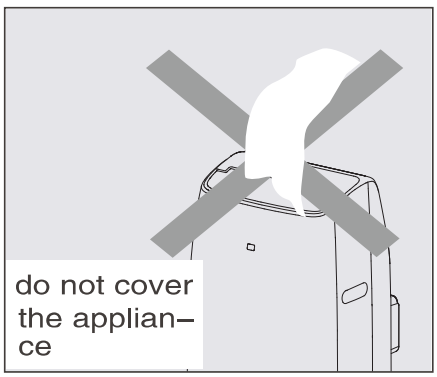

CLEANING

Before cleaning or maintenance, turn the appliance off and wait for a few minutes, then unplug from the electrical outlet.

Cleaning the Outer Case

You should clean the appliance with a slightly damp cloth then dry with a dry cloth.

- Never wash the appliance with water. It could be dangerous.
- Never use petrol, alcohol or solvents to clean the appliance.
- Never spray insecticide liquids or similar.

Cleaning the Air Filters

To keep your appliance working efficiently, you should clean the filter every three months.

A. The filter can be removed as shown in the picture below.

B. Use a vacuum cleaner to remove dust accumulations from the filter. If it is very dirty, immerse in warm water and rinse a number of times. The water should never be hotter than 104ºF (40ºC).

After the filter has dried completely, replace it back into the air conditioner.

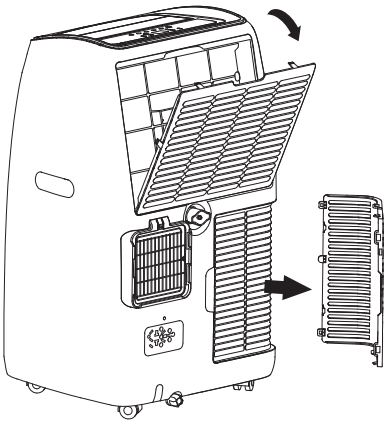

NOTE:

- Do not touch the metal fins in the air conditioner after removing the filter, as they may cause personal injury.
- Do not attempt to dry the filter with a hairdryer or other heating elements as this may deform or ignite the filter.
- Do not operate the air conditioner if the air filter is missing.

Maintenance Checklists

Pre-Season Maintenance Checklist

- Check the power cord for any cuts or exposed wiring.
- Check the ground prong is still on your power plug.
- Clean the air filter.
- Check whether the hose adapters and exhaust hose are installed tightly and free of damage.

Post-Season Maintenance Checklist

- Disconnect unit from the power outlet.
- Clean air filter and exterior case.
- Drain any accumulated water from the air conditioner.
- Wrap the air conditioner in plastic to prevent the accumulation of dust.

Long-Term Storage Checklist

- Disconnect unit from the power outlet.
- Clean air filter and exterior case.
- Wrap and/or cover the unit to prevent the accumulation of dust within the unit.
- Do not attempt to dry the filter with a hairdryer or other heating elements as this may deform or ignite the filter.
- Do not operate the air conditioner if the air filter is missing.

TROUBLESHOOTING

Troubleshoot your problem by using the chart below. If the air conditioner still does not work properly, please contact TURBRO customer service team via **support@turbro.com**. We usually reply to you within 1 business day.

ISSUE	POSSIBLE CAUSE	POSSIBLE REMEDY
Does not start when pressing the ON/OFF button	A. Didn't plug into the electrical outlet. B. The internal safety device has tripped.	A. Plug into the required wall outlet. B. Wait for 30 minutes, if the problem can't be solved, contact the TURBRO customer service team.
Unit stops operating	A. Room temperature is lower than set temperature (cooling mode). B. FT appears on the display screen. C. The unit is defrosting	A. Reset the temperature. B. Drain the water tank (Refer to 'Water Drainage Methods'). C. After defrosting is finished, the unit will resume operation.
No air is blowing from the air conditioner	A. The air exhaust hose is bent. B. Air outlet / inlet is blocked.	A. Position the air exhaust hose correctly and avoid any sharp bends or sags. B. Check and remove the obstacles blocking the air outlet and inlet.

ISSUE	POSSIBLE CAUSE	POSSIBLE REMEDY
Not cool enough	A. The windows, doors and / or curtains are not closed. B. There are heat sources inside the room (oven, hairdryer, etc.) C. The air exhaust hose is not connected or blocked. D. The temperature is set too high. E. Air filter is blocked by dust. F. The unit will take about 3 minutes of operation before cooling occurs.	A. Make sure all the doors, windows and curtains are closed (Refer to 'Tips for Correct Use'). B. Remove the heat sources if possible. C. Connect the air exhaust hoe and make sure it can function properly (Refer to 'Installing the Air Exhaust Hose'). D. Set a lower temperature. E. Clean the air filter (Refer to 'Cleaning the Air Filters'). F. Wait for 3 minutes until the compressor safety device delayed process has passed.
Noisy or vibration	The unit is placed on a not level or flat floor or surface.	Place the unit on a flat, level surface if possible.
Produces gurgling sound	Has the unit just been turned on or off?	The flowing water sound is the refrigerant inside the air conditioner, which is completely normal
Produces unpleasant smell	Air filter clogged	Clean the air filter (Refer to 'Cleaning the Air Filters')
FL / PF displays on the screen	The unit has a self-diagnosis system to identify a number of malfunctions.	Refer to the 'Self-Diagnosis'

If you notice or experience any of the following conditions, please turn off the air conditioner, disconnect from power, discontinue use, and contact support immediately.

- The power cord is overheating or otherwise damaged
- Abnormal sound during operation
- A strange odor is emitted from the unit
- Excessive water leakage the unit

Do not attempt to repair or retrofit the air conditioner by yourself. All repairs must be performed by qualified individuals.

WARRANTY & CUSTOMER SUPPORT

WARRANTY

TURBRO provides a 1-year limited warranty for TURBRO products from the date of purchase, subject to the following conditions and limitations outlined below.

What is covered?

- This warranty is limited to the repair or replacement of part(s) proved to be defective in material or workmanship, after said defect is confirmed by the manufacturer's inspection.
- The manufacturer may, at its discretion, fully discharge all obligations with respect to this warranty by refunding the wholesale price of the defective part(s).

What is not covered?

- Damage caused by the owner when attempting to fix or alter the product themselves.
- Damage caused by misuse, abuse, neglect, alterations, or unauthorized repair.
- Natural depreciation.
- Any alteration misuse of the product will nullify this warranty.
- This warranty is non-transferable, which is effective for the original buyer from the authorized seller only.

How to request warranty services?

- To obtain the benefit of this warranty, please leave a message online (www.turbro.com/contact), or send an email to support@turbro.com.

What will TURBRO do?

- Replace the item
- Refund the item under certain circumstances.

CUSTOMER SUPPORT

We are here to help anytime!

Any problems, write to us via support@turbro.com. We will get back to you within 1 business day.

TURBRO

www.turbro.com



CAN ICES-3 (B)/NMB-3(B)

FCC Caution

This device complies with part 15 of the FCC Rules. Operation is subject to the following two conditions:

(1) This device may not cause harmful interference, and (2) this device must accept any interference received, including interference that may cause undesired operation.

Any Changes or modifications not expressly approved by the party responsible for compliance could void the user's authority to operate the equipment.

Note: This equipment has been tested and found to comply with the limits for a Class B digital device, pursuant to part 15 of the FCC Rules. These limits are designed to provide reasonable protection against harmful interference in a residential installation. This equipment generates uses and can radiate radio frequency energy and, if not installed and used in accordance with the instructions, may cause harmful interference to radio communications. However, there is no guarantee that interference will not occur in a particular installation. If this equipment does cause harmful interference to radio or television reception, which can be determined by turning the equipment off and on, the user is encouraged to try to correct the interference by one or more of the following measures:

- Reorient or relocate the receiving antenna.

- Increase the separation between the equipment and receiver.

- Connect the equipment into an outlet on a circuit different from that to which the receiver is connected.

- Consult the dealer or an experienced radio/TV technician for help.

IC Warning

This device complies with industry Canada‘s license - exempt RSSs. Operation is subject to the following two conditions:

(1) This device may not cause interference;

(2) This device must accept any interference, including interference that may cause undesired operation of the device.

TURBRO

© Katmai Technology Limited

support@turbro.com

www.turbro.com

(323) 438-3334

PAP 22